# easy drive®
# The catalog 2019

Table of contents 2
Foreword 3
Introduction 4-7
Online configurator 8-9

**Timing belt easy drive®**

**Polyurethane**
General 10-11
Profiles 12
Designs 13
Open ended / endless welded 14-18
Molded endless 19-21
Wide timing belts 22-23
Flex timing belts 24-25

**Neoprene**
General 26
Profiles 27
MXL 28
XL 29
L / H / XH / XXH 30
DXL / DL / DH 31
3M 32
5M / 8M 33
8M / 14M / 20M 34
D5M / D8M / D14M 35
S3M / S5M / S8M 36
S8M / S14M / DS8M 37

**Backings / Finishing** 38-41
**Profiles / Cleats** 42-43

**Pulleys easy drive®**

General
T-profile 44
AT-profile 45
HTD-profile 46
Imperial-profile 47

**Pulleys easy drive®**
**Technical data**

**T-profile**
T2,5 48-49
T5 50-51
T10 52-53
T20 54-55

**AT-profile**
AT3 56-57
AT5 58-59
AT10 60-61
AT20 62-63

**HTD-profile**
HTD3M 64-65
HTD5M 66-67
HTD8M 68-69
HTD14M 70-71

**Imperial-profile**
MXL 72-73
XL 74-75
L 76-77
H 78-79
XH 80-81

Materials 82
Surface treatment 83

Fastening elements
Tension bushings 84-89
Notes 90-91


**Technical changes reserved. Version 11/18**





## Foreword

Dear business partners
and interested customers,

We have improved, expanded and revised our comprehensive **easy drive®** catalogue so that it reflects the current, large **easy drive®** - product range.

The **easy drive®** catalogue will prove an ideal tool for your planning process and – in view of its informative and detailed contents – it is an indispensable source of information about **easy drive®**, the new standard in timing belt engineering.

The strong and qualified demand of **easy drive®** products has led to many new projects and system restructuring measures in the market. This once again underscores the significance of the development, expansion and innovation of **easy drive®** in very different fields of application.

**easy drive®** has gained a successful position in the market today with over 40 stocked ring sizes for more than 600 pulley diameters all common tooth pitches (T / AT / HTD / imperial). **easy drive®** is available worldwide through our licensed and competent sales partners.

On our website www.easydrive.info, you will find detailed technical information, pictures of the products, the **easy drive®** product film as well as a list of licensed dealers and the **easy drive®** online configurator.

Please don't hesitate to contact us for any information or if you have any questions regarding possible applications of **easy drive®**.

**easy drive®** is a product of BELTING GROUP GmbH.

We wish you much success with **easy drive®**,
and look forward to working together with you,

**Michele Corrieri**

Managing Director
UIKER Antriebselemente AG

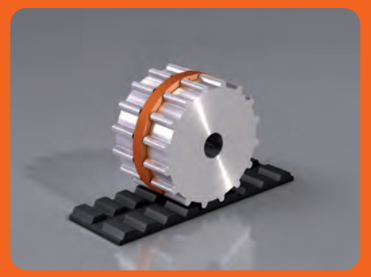

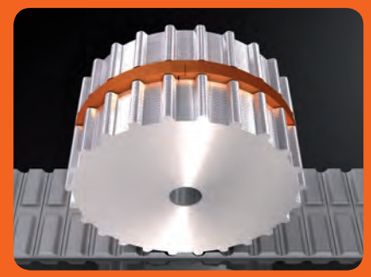

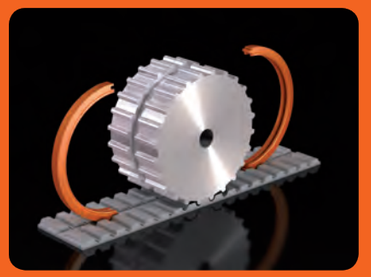

The precisely meshing easy drive® ring for mounting on the pulley is innovative progress.

The timing belt, which is fitted with a corresponding groove, engages reliably and accurately with the guide ring.

This leads to extremely high directional stability in guiding the timing belt – also when it moves in both directions and there is only limited installation space in the plant.“

## easy drive®

# Safe. Directional stability. Versatile.

**The new standard in timing belt engineering** is simple and efficient. Accuracy and smoothness of running usually are absolutely necessary when timing belts and pulleys work together in a drive application.

Highest possible directional stability with all tooth shapes, pitches and materials.

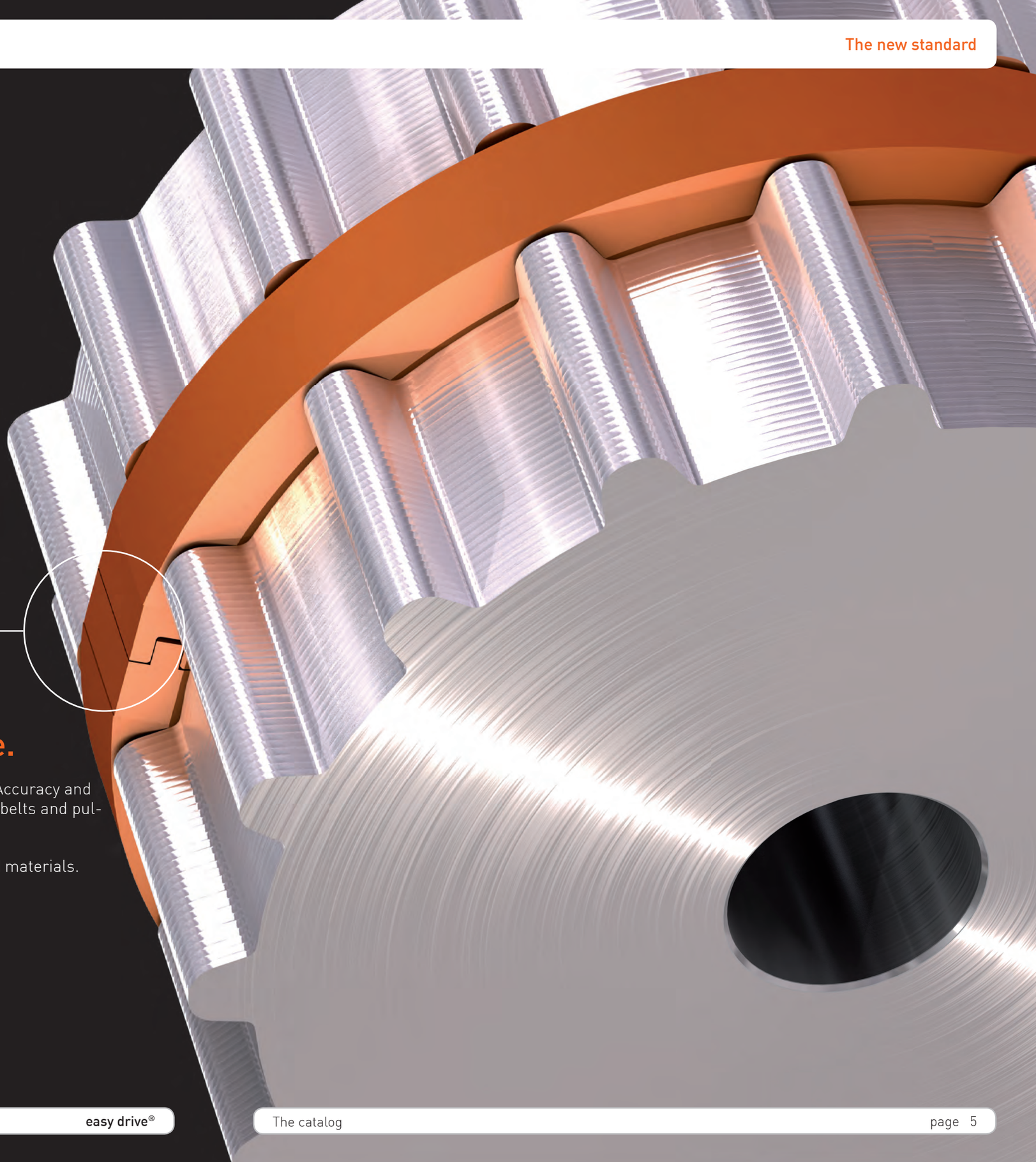

# easy drive®

## Creates successful solutions.

"With the introduction of the patented product easy drive®, completely new, cost- and resource-saving solutions can be realized for myriad tasks.

For dealers, OEM's and the manufacturers of plants and machines, the progress that can be achieved with easy drive® is not limited to qualitative improvements.

This new standard will open up unprecedented opportunities to meet individual and unconventional customer requirements throughout the entire range of synchronous belt engineering."

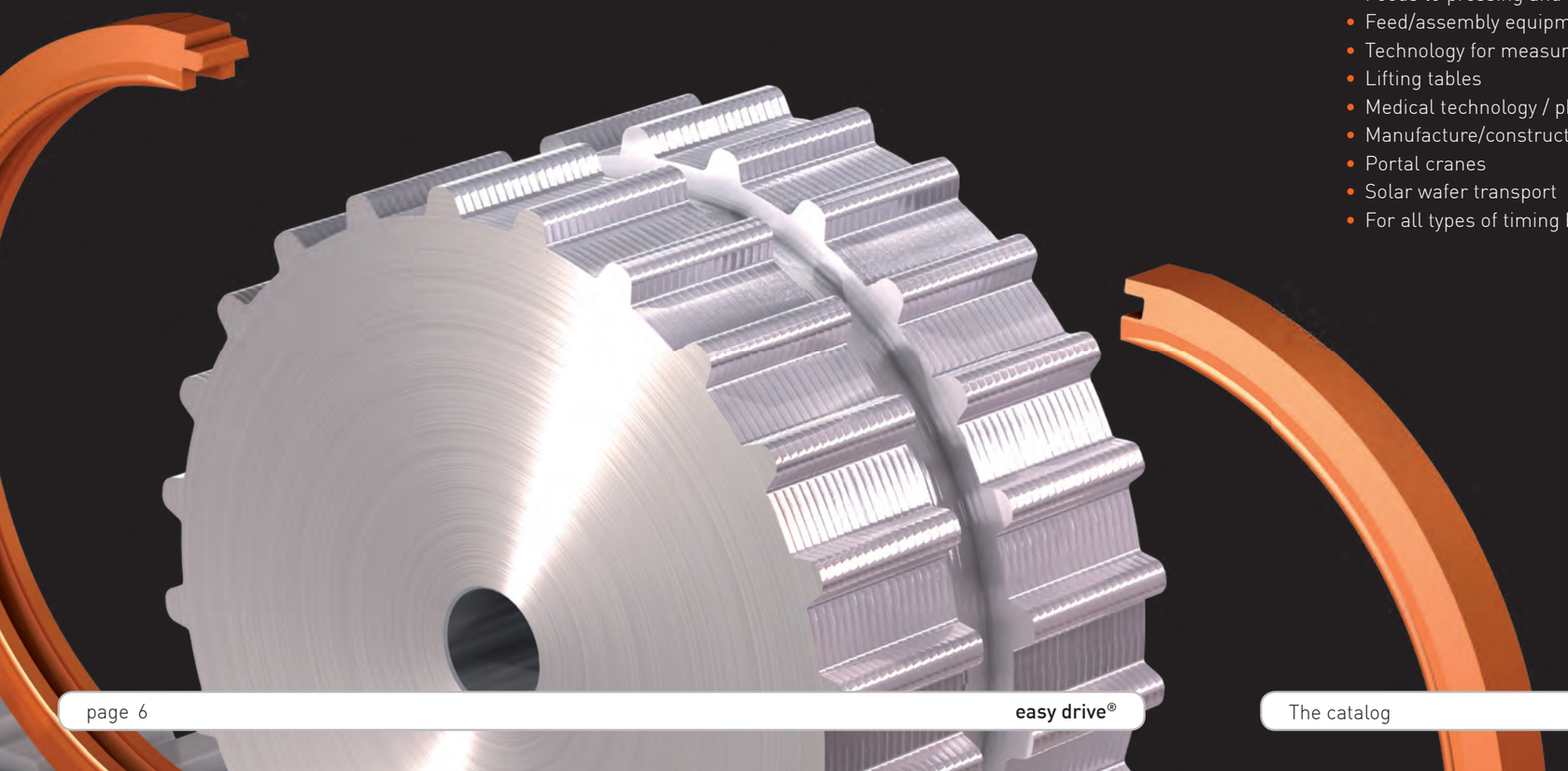

## Advantages

- Universal application instead of flanged pulleys or special toothed belt guides
- Can be used with any tooth shape or belt pitch
- Can be combined with any material – steel, aluminium, grey cast-iron or plastics
- For polyurethane and also for neoprene timing belts
- Maximum directional stability of the timing belt without lateral play, inaccurate running or drift
- Timing belt vibrations are reduced – very smooth running properties
- Applicable in both running directions, reversible
- Less installation space required in the plant because the pulleys have smaller diameters and less thickness
- Suitable for omega drives and deflectors
- Low-cost, saves resources

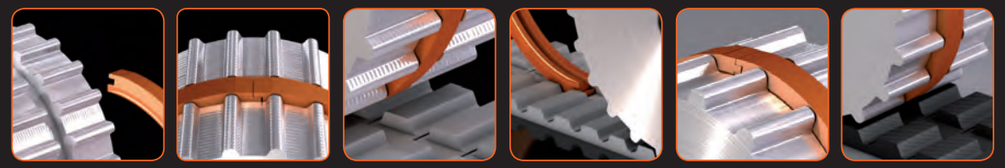

## Applications

- Packaging machines and labeling equipment
- Conveying systems and linear axles
- Storage and retrieval devices
- Flat glass production
- Feeds to pressing and grinding machines
- Feed/assembly equipment
- Technology for measuring devices
- Lifting tables
- Medical technology / pharmaceutical production
- Manufacture/construction of special machines
- Portal cranes
- Solar wafer transport
- For all types of timing belt applications

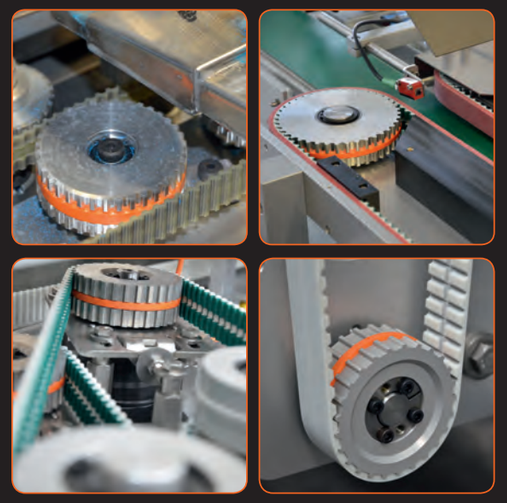

# easy drive®

## Five steps, one goal.

„The easy drive® Online Configurator sets the standard for design assistance and product information.

The five steps of the Online Configurator allow individual user inquiries and make it easy to calculate easy drive® pulleys as well as timing belts. Moreover, a quotation request or order for the selected configuration can be submitted immediately!“

http://www.easydrive.info/configurator

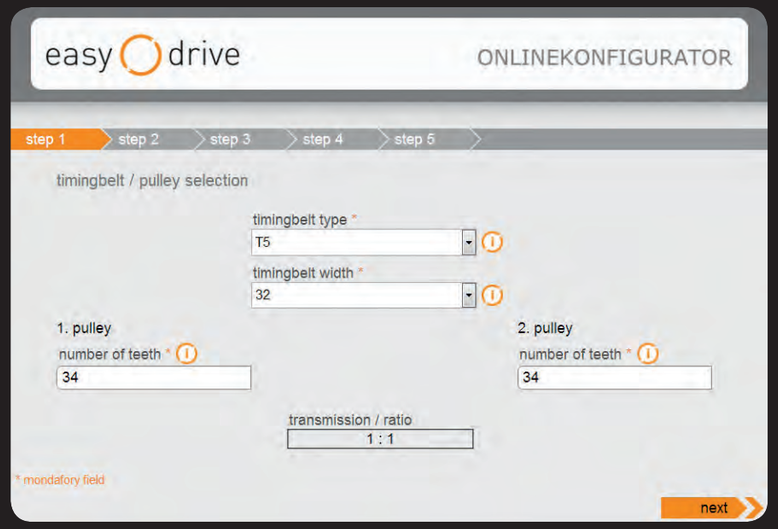

1. Select pulley type and belt width.

2. Define type and design of drive pulley and ...!

3. ... deflection pulley.

4. Define dimensions, specifications and finishing of belts.




5. That's it! Now you can submit the configured result as a query or order.

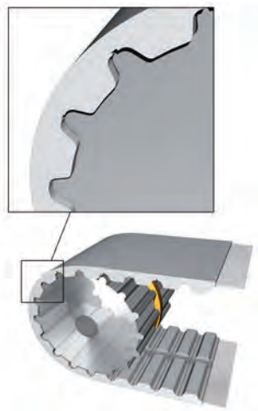

**Polyurethane timing belts** are made of highly abrasion resistant and high-strength steel cords, Kevlar cords or special cords, such as highly flexible or stainless steel cords, and manufactured in a sophisticated production process. The combination of these materials forms the basis for the wide range of applications in synchronous drive technology as well as for transport, conveying and positioning plants. In view of their diverse tooth designs, materials and production methods, polyurethane timing belts are characterized by superior mechanical, chemical and physical properties. Polyurethane timing belts ensure a constant load distribution for the transmission of power and high torque, have high mechanical load capacity, are flexible and display high belt tension and heat resistance.

**easy drive® polyurethane timing belts** are produced as yard ware, endless welded, sleeve or flex-belt in almost all lengths and width sizes. The guiding groove on the tooth side can either be produced in the production process or milled later.

**easy drive® open-end polyurethane timing belts** offer highest flexibility for synchronous conveying and positioning applications and innumerable application possibilities because of the large number of tooth forms.

**easy drive® endless welded polyurethane timing belts "V"**
Endless welded timing belts can be produced in nearly all lengths. They are typically used in conveying applications.

**easy drive® open linear polyurethane timing belts "M"**
Open-end timing belts are preferably used for linear applications.

For special conveying applications, we can offer polyurethane timing belts with different kinds of backings and/or welded profiles.

**Polyurethane molded timing belts** (sleeves) are cast in special molds. These types of belts feature very exact pitch sizes along the whole belt and are particularly suitable whenever smooth running and high-speed drive are needed.

**easy drive® polyurethane timing belts "Flex"** are extruded with endless winded cords. In these belts the cords are helically spooled. Due to the high power transmission capacity of these belts, they can be used universally for power transmission as well as conveying and positioning applications.

min./max. length 720 – 15,000 mm (width 100 mm)
min./max. length 900 – 22,700 mm (width 150 mm)

**easy drive® polyurethane "Wide belts"** are endless welded in widths up to 900 mm. These belts are especially developed for synchronous conveying applications. The wide range of widths as well as high chemical and mechanical properties allow a wide spectrum of applications. In addition, we can offer these belts in a special FDA polyurethane compound and polyamide fabric on the tooth and/or backside.

| profile | min. width (mm) | max. width open / sleeve (mm) | min. no. of teeth of pulley |
|---|---|---|---|
| T2,5 | 12 | 100 / 200 | 27 |
| T5 | 12 | 150 / 400 | 14 |
| T10 | 12 | 500 / 400 | 12 |
| T20 | 25 | 150 | 15 |
| AT3 | 12 | 100 | 22 |
| AT5 | 12 | 150 / 400 | 14 |
| AT10 | 16 | 150 / 400 | 12 |
| AT20 | 25 | 150 | 18 |
| HTD3 | 12 | 30 | 23 |
| HTD / STD5 / RPP5 | 12 | 150 | 14 |
| HTD / STD8 / RPP8 | 15 | 150 | 20 |
| HTD / STD14 / RPP14 | 25 | 170 | 28 |
| MXL | 12,7 | 240 / 300 | 34 |
| XL | 12,7 | 101,6 / 300 | 14 |
| L | 12,7 | 152,4 / 300 | 10 |
| H | 12,7 | 152,4 / 300 | 14 |
| XH | 25,4 | 152,4 | 18 |

**T-profile**
Trapezoid profile according to DIN 7721
Metric pitches: T2,5 / T5 / T10 / T20
The standard version is universally applicable for any tasks in drive and conveying technology

**AT-profile**
The AT-profile is a further development of the T-profile and, in particular, provides higher tooth volume, higher tooth load capacity and stronger cords.
Metric pitches: AT3 / AT5 / AT10 / AT20
Advantages:
- greater tooth intermesh and less contact hit
- cords for constant pitch and higher tear resistance
- higher efficiency of up to 50% as compared to the T-profile

**Imperial profile**
Inch pitch sizes according to DIN/ISO 5296
MXL = 2,032 mm
XL = 5,08 mm
L = 9,525 mm
H = 12,7 mm
XH = 22,225 mm
XXH = 31,75 mm
Mainly used in GB, USA and Asia

**HTD-profile**
The High Torque Drive profile has round teeth to ensure faultless meshing with the pulley as well as optimized power and tension distribution. In addition, the high HTD tooth prevents jump-over.
Metric pitches: HTD5M / HTD8M / HTD14M
Typical applications:
- Linear axles
- Lifting applications
- Drive positioning
- Conveying

**STD-profile**
The STD Super Torque Drive has involute toothing to ensure optimum meshing with the pulley as well as optimal power and tension distribution and, consequently, silent running of the belt.
Metric pitches: STD5M / STD8M / STD14M
Typical applications:
- Linear axles
- Positioning drives
- Silent run drives

**Single-sided toothing**
T2,5 / T5 / T10 / T20
AT3 / AT5 / AT10 / AT20
MXL / XL / L / H / XH
HTD / STD 5M, 8M, 14M

**Double-sided toothing**
T5DL / T10DL / (T20DL)
AT5DL / AT10DL
(HDL)

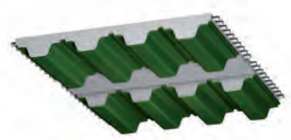

**Polyamide fabric on tooth side "NT"**
T5 / T10 / T20
AT5 / AT10 / AT20
XL / L / H / XH
HTD / STD / RPP
The low coefficient of friction on the tooth side lets the toothing mesh more easily with the pulley, reduces noise and friction on the running surface.

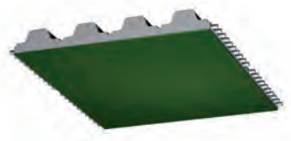

**Polyamide fabric on backside "NB"**
T5 / T10 / T20
AT5 / AT10 / AT20
XL / L / H / XH
HTD / STD
The polyamide fabric increases the sliding properties and is wear resistant.

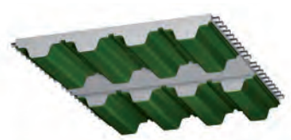

**Polyamide fabric on both sides "NTB"**
T5 / T10 / T20
AT5 / AT10
XL / L / H / XH
HTD / STD / RPP
T5 / T10 / AT5 available with antistatic fabric.

## T pitches

| | T2,5 | T5 | T10 | T20 |
|---|---|---|---|---|
| min. length -V in mm | 350 | 340 | 400 | 1000 |
| Slitting lane mm | 25 | 16 / 25 | 16 / 25 | 16 / 25 |
| Full roll length in m | 100 | 100 | 100 | 50 |
| min.teeth without contra-flexure Zmin | 15 | 10 | 12 | 15 |
| min.diameter tension roller on tooth side | 15 | 20 | 60 | 120 |
| min.teeth with contra-flexure Zmin | 18 | 18 | 25 | 25 |
| min. diameter tension roller on backside | 18 | 30 | 80 | 150 |
| Polyamide fabric on tooth side PAZ | | x | x | x |
| Polyamide fabric on backside PAR | | x | x | x |
| Polyamide fabric on both sides PAZ/PAR | | x | x | x |
| FDA/EU approved (Kevlar cord) | | x | x | |
| antistatic version available PAZ / PAR | | x | x | |

## AT pitches

| | AT3 | AT5 | AT5L | AT10 | AT10L | AT20 | AT20L |
|---|---|---|---|---|---|---|---|
| min. length -V in mm | 649 | 340 | | 380 | | 1000 | |
| Slitting lane mm | | 16 / 25 | 25 | 16 / 25 | | 25 | |
| Full roll length in m | 100 | 100 | 100 | 100 | 100 | 50 | 50 |
| min.teeth without contra-flexure Zmin | 15 | 15 | 15 | 15 | 25 | 18 | 30 |
| min.diameter tension roller on tooth side | 20 | 25 | 30 | 50 | 80 | 120 | 200 |
| min.teeth with contra-flexure Zmin | 20 | 25 | 25 | 25 | 35 | 25 | 40 |
| min. diameter tension roller on backside | 20 | 60 | 60 | 120 | 150 | 180 | 250 |
| Polyamide fabric on tooth side PAZ | | x | x | x | x | x | x |
| Polyamide fabric on backside PAR | | x | x | x | x | x | x |
| Polyamide fabric on both sides PAZ/PAR | | x | x | x | x | x | x |
| FDA/EU approved (Kevlar cord) | | x | | x | | | |
| antistatic version available PAZ / PAR | | x | | | | | |

## Inch pitch sizes

| | XL | L | H | XH |
|---|---|---|---|---|
| min. length -V in mm | 508 | 508 | 508 | 1000 |
| Slitting lane mm | 25,4 | 25,4 | 25,4 | 25,4 |
| Full roll length in m | 100 | 100 | 100 | 50 |
| min.teeth without contra-flexure Zmin | 15 | 15 | 14 | 18 |
| min.diameter tension roller on tooth side | 30 | 60 | 60 | 150 |
| min.teeth with contra-flexure Zmin | 18 | 20 | 20 | 25 |
| min. diameter tension roller on backside | 30 | 60 | 80 | 180 |
| Polyamide fabric on tooth side PAZ | x | x | x | x |
| Polyamide fabric on backside PAR | x | x | x | x |
| Polyamide fabric on both sides PAZ/PAR | x | x | x | x |
| FDA/EU approved (Kevlar cord) | | | x | |

## HTD/STD pitches

| | HTD5M | HTD8M | HTDL8 | HTD14 | HTDL14M | STD5 | STD8 |
|---|---|---|---|---|---|---|---|
| min. length -V in mm | 480 | 480 | | 1000 | | 480 | 960 |
| Slitting lane mm | 25 | 25 | | 55 | | 25 | 20 / 30 |
| Full roll length in m | 100 | 100 | 100 | 50 | 50 | 100 | 100 |
| min.teeth without contra-flexure Zmin | 16 | 18 | 32 | 25 | 36 | 14 | 20 |
| min.diameter tension roller on tooth side | 25 | 50 | 80 | 125 | 160 | 22 | 50 |
| min.teeth with contra-flexure Zmin | 20 | 25 | 40 | 35 | 40 | 20 | 26 |
| min. diameter tension roller on backside | 60 | 120 | 150 | 200 | 250 | 60 | 120 |
| Polyamide fabric on tooth side PAZ | x | x | x | x | x | x | x |
| Polyamide fabric on backside PAR | x | x | x | x | x | x | x |
| Polyamide fabric on both sides PAZ/PAR | x | x | x | x | x | x | x |

x = Standard-belt width





## T pitches

T 2,5

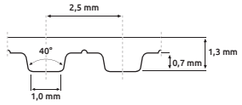


T 5

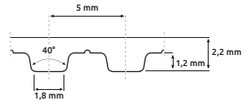


T 10

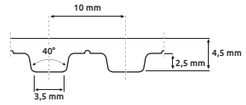


T 20

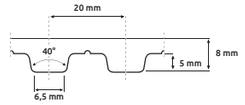


| Pitch | Standard width | max. width | Specific belt weight | | | | Ultimate tensile strength | | | | Allowable belt force open ended | | | | Allowable belt force endless welded | | | | Allowable effective force |
|---|---|---|---|---|---|---|---|---|---|---|---|---|---|---|---|---|---|---|---|
| | | | msp (kg/m/mm) | | | | Fbreak (N) | | | | F1all (N) | | | | F1all (N) | | | | Feall |
| | mm | mm | Steel | Aramid | HF | stain-less steel | Steel | Aramid | HF | stain-less steel | Steel | Ara-mid | HF | stain-less steel | Steel | Ara-mid | HF | stain-less steel | min. Z15 |
| T2,5 | 10 | 20 | 0,0014 | | | | 410 | | | | 100 | | | | 50 | | | | |
| T2,5 | 16 | 20 | 0,0014 | | | | 610 | | | | 150 | | | | 75 | | | | |
| T2,5 | 20 | 20 | 0,0014 | | | | 820 | | | | 200 | | | | 100 | | | | |
| T5 | 10 | 150 | 0,0022 | 0,0020 | | | 1250 | 3162 | | | 311 | 346 | | | 156 | 259 | | | 356 |
| T5 | 16 | 150 | 0,0022 | 0,0020 | | | 2000 | 5245 | | | 498 | 574 | | | 249 | 430 | | | 570 |
| T5 | 25 | 150 | 0,0022 | 0,0020 | | | 3375 | 8370 | | | 840 | 916 | | | 420 | 687 | | | 890 |
| T5 | 32 | 150 | 0,0022 | 0,0020 | | | 4250 | 10800 | | | 1058 | 1181 | | | 529 | 886 | | | 1139 |
| T5 | 50 | 150 | 0,0022 | 0,0020 | | | 6875 | 17050 | | | 1711 | 1865 | | | 856 | 1399 | | | 1780 |
| T5 | 75 | 150 | 0,0022 | 0,0020 | | | 10375 | 25730 | | | 2582 | 2814 | | | 1291 | 2111 | | | 2670 |
| T5 | 100 | 150 | 0,0022 | 0,0020 | | | 13875 | 34410 | | | 3453 | 3764 | | | 1727 | 2823 | | | 3560 |
| T10 | 12 | 150 | 0,0044 | 0,0036 | 0,0047 | | 2940 | 3601 | 4340 | | 786 | 474 | 964 | | 393 | 355 | 482 | | 811 |
| T10 | 16 | 150 | 0,0044 | 0,0036 | 0,0047 | | 4200 | 4980 | 6200 | | 1123 | 655 | 1376 | | 561 | 491 | 688 | | 1082 |
| T10 | 25 | 150 | 0,0044 | 0,0036 | 0,0047 | | 7140 | 8085 | 10540 | | 1909 | 1064 | 2340 | | 954 | 798 | 1170 | | 1690 |
| T10 | 32 | 150 | 0,0044 | 0,0036 | 0,0047 | | 9240 | 10500 | 13640 | | 2470 | 1381 | 3028 | | 1235 | 1036 | 1514 | | 2163 |
| T10 | 40 | 150 | 0,0044 | 0,0036 | 0,0047 | | 11340 | 13259 | 16740 | | 3031 | 1744 | 3716 | | 1516 | 1308 | 1858 | | 2704 |
| T10 | 50 | 150 | 0,0044 | 0,0036 | 0,0047 | | 14700 | 16709 | 21700 | | 3929 | 2189 | 4818 | | 1965 | 1648 | 2409 | | 3380 |
| T10 | 75 | 150 | 0,0044 | 0,0036 | 0,0047 | | 22260 | 25333 | 32860 | | 5950 | 3332 | 7295 | | 2975 | 2499 | 3648 | | 5070 |
| T10 | 100 | 150 | 0,0044 | 0,0036 | 0,0047 | | 29820 | 33957 | 44020 | | 7971 | 4467 | 9773 | | 3985 | 3350 | 4886 | | 6760 |
| T10 | 150 | 150 | 0,0044 | 0,0036 | 0,0047 | | 44940 | 51205 | 66340 | | 12012 | 6736 | 14728 | | 6006 | 5052 | 7364 | | 10140 |
| T20 | 25 | 150 | 0,0075 | 0,0059 | 0,0072 | 0,0074 | 14250 | 16185 | 12975 | 10688 | 3741 | 1750 | 3456 | 2806 | 1871 | 1313 | 1728 | 1403 | 3160 |
| T20 | 32 | 150 | 0,0075 | 0,0059 | 0,0072 | 0,0074 | 18050 | 21019 | 16435 | 13538 | 4739 | 2273 | 4378 | 3554 | 2369 | 1705 | 2189 | 1777 | 4025 |
| T20 | 50 | 150 | 0,0075 | 0,0059 | 0,0072 | 0,0074 | 29450 | 33449 | 26815 | 22088 | 7731 | 3617 | 7142 | 5799 | 3866 | 2713 | 3571 | 2899 | 6320 |
| T20 | 75 | 150 | 0,0075 | 0,0059 | 0,0072 | 0,0074 | 44650 | 50713 | 40655 | 33488 | 11722 | 5483 | 10829 | 8791 | 5861 | 4113 | 5414 | 4396 | 9480 |
| T20 | 100 | 150 | 0,0075 | 0,0059 | 0,0072 | 0,0074 | 59850 | 67977 | 54495 | 44888 | 15712 | 7350 | 14515 | 11784 | 7856 | 5513 | 7258 | 5892 | 12640 |
| T20 | 150 | 150 | 0,0075 | 0,0059 | 0,0072 | 0,0074 | 90250 | 102505 | 82175 | 67688 | 23693 | 11083 | 21888 | 17770 | 11847 | 8313 | 10944 | 8885 | 18960 |

## AT pitches

AT 3

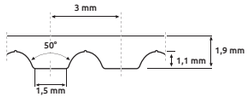


AT 5

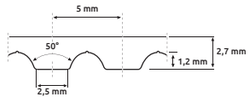


AT 10

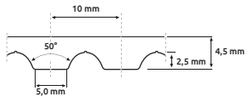


AT 20

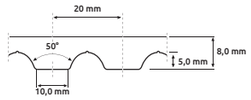


| Pitch | Standard width | max. width | Specific belt weight | | | | Ultimate tensile strength | | | | Allowable belt force open ended | | | | Allowable belt force endless welded | | | | Allowable effective force |
|---|---|---|---|---|---|---|---|---|---|---|---|---|---|---|---|---|---|---|---|
| | | | msp (kg/m/mm) | | | | Fbreak (N) | | | | F1all (N) | | | | F1all (N) | | | | Feall |
| | mm | mm | Steel | Ara-mid | HF | stain-less steel | Steel | Aramid | HF | stain-less steel | Steel | Ara-mid | HF | stain-less steel | Steel | Ara-mid | HF | stain-less steel | min. Z15 |
| AT3 | 10 | 50 | 0,0023 | | | | 1555 | | | | 385 | | | | 193 | | | | |
| AT3 | 16 | 50 | 0,0023 | | | | 2515 | | | | 620 | | | | 310 | | | | |
| AT3 | 25 | 50 | 0,0023 | | | | 4050 | | | | 1010 | | | | 505 | | | | |
| AT3 | 50 | 50 | 0,0023 | | | | 8255 | | | | 2060 | | | | 1030 | | | | |
| | | | | | | | | | | | | | | | | | | | |
| AT5 | 10 | 150 | 0,0033 | 0,0027 | | | 2565 | 3140 | | | 634 | 455 | | | 317 | 341 | | | 516 |
| AT5 | 16 | 150 | 0,0033 | 0,0027 | | | 4275 | 5224 | | | 1056 | 757 | | | 528 | 568 | | | 826 |
| AT5 | 25 | 150 | 0,0033 | 0,0027 | | | 7125 | 8350 | | | 1761 | 1210 | | | 880 | 908 | | | 1290 |
| AT5 | 32 | 150 | 0,0033 | 0,0027 | | | 9120 | 10782 | | | 2253 | 1562 | | | 1127 | 1172 | | | 1651 |
| AT5 | 50 | 150 | 0,0033 | 0,0027 | | | 14535 | 17034 | | | 3591 | 2468 | | | 1796 | 1851 | | | 2580 |
| AT5 | 75 | 150 | 0,0033 | 0,0027 | | | 21945 | 25718 | | | 5422 | 3727 | | | 2711 | 2795 | | | 3870 |
| AT5 | 100 | 150 | 0,0033 | 0,0027 | | | 29355 | 34402 | | | 7253 | 4985 | | | 3627 | 3739 | | | 5160 |
| | | | | | | | | | | | | | | | | | | | |
| ATL5 | 10 | 150 | 0,0028 | | | | 3720 | | | | 826 | | | | | | | | 516 |
| ATL5 | 16 | 150 | 0,0028 | | | | 6200 | | | | 1376 | | | | | | | | 826 |
| ATL5 | 25 | 150 | 0,0028 | | | | 10540 | | | | 2340 | | | | | | | | 1290 |
| ATL5 | 32 | 150 | 0,0028 | | | | 13640 | | | | 3028 | | | | | | | | 1651 |
| ATL5 | 50 | 150 | 0,0028 | | | | 21700 | | | | 4818 | | | | | | | | 2580 |
| ATL5 | 75 | 150 | 0,0028 | | | | 32860 | | | | 7295 | | | | | | | | 3870 |
| ATL5 | 100 | 150 | 0,0028 | | | | 44020 | | | | 9773 | | | | | | | | 5160 |
| ATL5 | 150 | 150 | 0,0028 | | | | 66340 | | | | 14728 | | | | | | | | 7740 |
| | | | | | | | | | | | | | | | | | | | |
| AT10 | 16 | 150 | 0,0057 | 0,0042 | 0,0055 | 0,0057 | 8550 | 9970 | 7785 | 6413 | 2245 | 1078 | 2074 | 1683 | 1122 | 809 | 1037 | 842 | 1651 |
| AT10 | 25 | 150 | 0,0057 | 0,0042 | 0,0055 | 0,0057 | 14250 | 16185 | 12975 | 10688 | 3741 | 1750 | 3456 | 2806 | 1871 | 1313 | 1728 | 1403 | 2580 |
| AT10 | 32 | 150 | 0,0057 | 0,0042 | 0,0055 | 0,0057 | 18050 | 21019 | 16435 | 13538 | 4739 | 2273 | 4378 | 3554 | 2369 | 1705 | 2189 | 1777 | 3302 |
| AT10 | 50 | 150 | 0,0057 | 0,0042 | 0,0055 | 0,0057 | 29450 | 33449 | 26815 | 22088 | 7731 | 3617 | 7142 | 5799 | 3866 | 2713 | 3571 | 2899 | 5160 |
| AT10 | 75 | 150 | 0,0057 | 0,0042 | 0,0055 | 0,0057 | 44650 | 50713 | 40655 | 33488 | 11722 | 5483 | 10829 | 8791 | 5861 | 4113 | 5414 | 4396 | 7740 |
| AT10 | 100 | 150 | 0,0057 | 0,0042 | 0,0055 | 0,0057 | 59850 | 67977 | 54495 | 44888 | 15712 | 7350 | 14515 | 11784 | 7856 | 5513 | 7258 | 5892 | 10320 |
| AT10 | 150 | 150 | 0,0057 | 0,0042 | 0,0055 | 0,0057 | 90250 | 102505 | 82175 | 67668 | 23693 | 11083 | 21888 | 17770 | 11847 | 8313 | 10944 | 8885 | 15480 |
| | | | | | | | | | | | | | | | | | | | |
| ATL10 | 16 | 150 | 0,0067 | 0,0041 | 0,0072 | | 13840 | 13390 | 15400 | | 3349 | 1075 | 2902 | | 1122 | 809 | 1037 | | 1651 |
| ATL10 | 25 | 150 | 0,0067 | 0,0041 | 0,0072 | | 24220 | 21798 | 26950 | | 5860 | 1750 | 5079 | | 1871 | 1313 | 1728 | | 2580 |
| ATL10 | 32 | 150 | 0,0067 | 0,0041 | 0,0072 | | 31140 | 28337 | 34650 | | 7534 | 2275 | 6530 | | 2369 | 1705 | 2189 | | 3302 |
| ATL10 | 50 | 150 | 0,0067 | 0,0041 | 0,0072 | | 50170 | 45153 | 55825 | | 12139 | 3625 | 10521 | | 3866 | 2713 | 3571 | | 5160 |
| ATL10 | 75 | 150 | 0,0067 | 0,0041 | 0,0072 | | 76120 | 68508 | 84700 | | 18417 | 5500 | 15963 | | 5861 | 4113 | 5414 | | 7740 |
| ATL10 | 100 | 150 | 0,0067 | 0,0041 | 0,0072 | | 102070 | 91863 | 113575 | | 24696 | 7375 | 21404 | | 7856 | 5513 | 7258 | | 10320 |
| ATL10 | 150 | 150 | 0,0067 | 0,0041 | 0,0072 | | 153970 | 138573 | 171325 | | 37253 | 11125 | 32288 | | 11847 | 8313 | 10944 | | 15480 |
| | | | | | | | | | | | | | | | | | | | |
| AT20 | 25 | 150 | 0,0097 | 0,0073 | | | 24220 | 21798 | | | 5860 | 1750 | | | 2930 | 1313 | | | 5430 |
| AT20 | 32 | 150 | 0,0097 | 0,0073 | | | 31140 | 28337 | | | 7534 | 2275 | | | 3767 | 1706 | | | 6950 |
| AT20 | 50 | 150 | 0,0097 | 0,0073 | | | 50170 | 45153 | | | 12139 | 3625 | | | 6069 | 2719 | | | 10860 |
| AT20 | 75 | 150 | 0,0097 | 0,0073 | | | 76120 | 68508 | | | 18417 | 5500 | | | 9209 | 4125 | | | 16290 |
| AT20 | 100 | 150 | 0,0097 | 0,0073 | | | 102070 | 91863 | | | 24696 | 7375 | | | 12348 | 5531 | | | 21720 |
| AT20 | 150 | 150 | 0,0097 | 0,0073 | | | 153970 | 138573 | | | 37253 | 11125 | | | 18626 | 8344 | | | 32580 |
| | | | | | | | | | | | | | | | | | | | |
| ATL20 | 32 | 150 | 0,0107 | | | | 41600 | | | | 9106 | | | | | | | | 6950 |
| ATL20 | 50 | 150 | 0,0107 | | | | 70400 | | | | 15410 | | | | | | | | 10860 |
| ATL20 | 75 | 150 | 0,0107 | | | | 105600 | | | | 23115 | | | | | | | | 16290 |
| ATL20 | 100 | 150 | 0,0107 | | | | 144000 | | | | 31520 | | | | | | | | 21720 |
| ATL20 | 150 | 150 | 0,0107 | | | | 217600 | | | | 47631 | | | | | | | | 32580 |



## HTD pitches

HTD 5

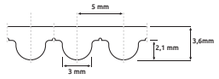


HTD 8

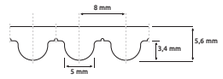


HTD 14

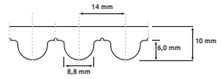


STD 5

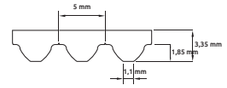


STD 8

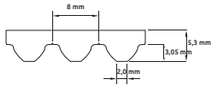


| Pitch | Standard width | max. width | Specific belt weight | | | | Ultimate tensile strength | | | | Allowable belt force open ended | | | | Allowable belt force endless welded | | | | Allowable effective force |
|---|---|---|---|---|---|---|---|---|---|---|---|---|---|---|---|---|---|---|---|
| | | | msp (kg/m/mm) | | | | Fbreak (N) | | | | F1all (N) | | | | F1all (N) | | | | Feall |
| | mm | mm | Steel | Aramid | HF | stain-less steel | Steel | Aramid | HF | stain-less steel | Steel | Ara-mid | HF | stain-less steel | Steel | Ara-mid | HF | stain-less steel | min. Z15 |
| HTD5 | 10 | 150 | 0,0044 | 0,0029 | | | 2520 | 2911 | | | 674 | 383 | | | 337 | 287 | | | 408 |
| HTD5 | 15 | 150 | 0,0044 | 0,0029 | | | 3780 | 4635 | | | 1010 | 610 | | | 505 | 457 | | | 612 |
| HTD5 | 20 | 150 | 0,0044 | 0,0029 | | | 5460 | 6360 | | | 1459 | 837 | | | 730 | 627 | | | 816 |
| HTD5 | 25 | 150 | 0,0044 | 0,0029 | | | 7140 | 8085 | | | 1909 | 1064 | | | 954 | 798 | | | 1020 |
| HTD5 | 50 | 150 | 0,0044 | 0,0029 | | | 14700 | 16709 | | | 3929 | 2198 | | | 1965 | 1648 | | | 2040 |
| HTD5 | 100 | 150 | 0,0044 | 0,0029 | | | 29820 | 33957 | | | 7971 | 4467 | | | 3985 | 3350 | | | 4080 |
| HTD5 | 150 | 150 | 0,0044 | 0,0029 | | | 44940 | 51205 | | | 12012 | 6736 | | | 6006 | 5052 | | | 6120 |
| | | | | | | | | | | | | | | | | | | | |
| HTD8 | 15 | 150 | 0,0069 | 0,0047 | 0,0066 | 0,0068 | 7600 | 9279 | 6920 | 5700 | 1995 | 1003 | 1843 | 1496 | 998 | 753 | 922 | 748 | 1122 |
| HTD8 | 20 | 150 | 0,0069 | 0,0047 | 0,0066 | 0,0068 | 10450 | 12732 | 9515 | 7838 | 2743 | 1377 | 2534 | 2058 | 1372 | 1033 | 1267 | 1029 | 1496 |
| HTD8 | 25 | 150 | 0,0069 | 0,0047 | 0,0066 | 0,0068 | 14250 | 16185 | 12975 | 10688 | 3741 | 1750 | 3456 | 2806 | 1871 | 1313 | 1728 | 1403 | 1870 |
| HTD8 | 30 | 150 | 0,0069 | 0,0047 | 0,0066 | 0,0068 | 17100 | 19638 | 15570 | 12825 | 4489 | 2123 | 4147 | 3367 | 2245 | 1593 | 2074 | 1683 | 2244 |
| HTD8 | 50 | 150 | 0,0069 | 0,0047 | 0,0066 | 0,0068 | 29450 | 33449 | 26815 | 22088 | 7731 | 3617 | 7142 | 5799 | 3866 | 2713 | 3571 | 2899 | 3740 |
| HTD8 | 85 | 150 | 0,0069 | 0,0047 | 0,0066 | 0,0068 | 50350 | 57619 | 45845 | 37763 | 13218 | 6230 | 12211 | 9914 | 6609 | 4673 | 6106 | 4957 | 6358 |
| HTD8 | 100 | 150 | 0,0069 | 0,0047 | 0,0066 | 0,0068 | 59850 | 67977 | 54495 | 44888 | 15712 | 7350 | 14515 | 11784 | 7856 | 5513 | 7258 | 5892 | 7480 |
| HTD8 | 150 | 150 | 0,0069 | 0,0047 | 0,0066 | 0,0068 | 90250 | 102505 | 82175 | 67688 | 23693 | 11083 | 21888 | 17770 | 11847 | 8313 | 10944 | 8885 | 11220 |
| | | | | | | | | | | | | | | | | | | | |
| HTDL8 | 20 | 150 | 0,0079 | 0,0045 | 0,0083 | | 19030 | 17127 | 21175 | | 4604 | 1375 | 3991 | | 1372 | 1033 | 1267 | | 1496 |
| HTDL8 | 25 | 150 | 0,0079 | 0,0045 | 0,0083 | | 24220 | 21798 | 26950 | | 5860 | 1750 | 5079 | | 1871 | 1313 | 1728 | | 1870 |
| HTDL8 | 30 | 150 | 0,0079 | 0,0045 | 0,0083 | | 29410 | 26469 | 32725 | | 7116 | 2125 | 6167 | | 2245 | 1593 | 2074 | | 2244 |
| HTDL8 | 50 | 150 | 0,0079 | 0,0045 | 0,0083 | | 50170 | 45153 | 55825 | | 12139 | 3625 | 10521 | | 3866 | 2713 | 3571 | | 3740 |
| HTDL8 | 85 | 150 | 0,0079 | 0,0045 | 0,0083 | | 86500 | 77850 | 96250 | | 20929 | 6250 | 18139 | | 6609 | 4673 | 6106 | | 6358 |
| HTDL8 | 100 | 150 | 0,0079 | 0,0045 | 0,0083 | | 102070 | 91863 | 113575 | | 24696 | 7375 | 21404 | | 7856 | 5513 | 7258 | | 7480 |
| HTDL8 | 150 | 150 | 0,0079 | 0,0045 | 0,0083 | | 153970 | 138573 | 171325 | | 37253 | 11125 | 32288 | | 11847 | 8313 | 10944 | | 11220 |
| | | | | | | | | | | | | | | | | | | | |
| HTD14 | 25 | 170 | 0,0108 | 0,0084 | 0,0112 | | 20760 | 18995 | 23100 | | 5156 | 1515 | 4470 | | 2578 | 1136 | 2235 | | 3430 |
| HTD14 | 40 | 170 | 0,0108 | 0,0084 | 0,0112 | | 34600 | 31327 | 38500 | | 8593 | 2499 | 7449 | | 4297 | 1874 | 3725 | | 5488 |
| HTD14 | 55 | 170 | 0,0108 | 0,0084 | 0,0112 | | 48440 | 43658 | 53900 | | 12031 | 3482 | 10429 | | 6015 | 2612 | 5214 | | 7546 |
| HTD14 | 85 | 170 | 0,0108 | 0,0084 | 0,0112 | | 74390 | 68321 | 82775 | | 18476 | 5449 | 16016 | | 9238 | 4087 | 8008 | | 11662 |
| HTD14 | 115 | 170 | 0,0108 | 0,0084 | 0,0112 | | 102070 | 92984 | 113575 | | 25350 | 7416 | 21975 | | 12675 | 5562 | 10988 | | 15778 |
| HTD14 | 170 | 170 | 0,0108 | 0,0084 | 0,0112 | | 152240 | 138199 | 169400 | | 37811 | 11022 | 32776 | | 18905 | 8267 | 16388 | | 23324 |
| | | | | | | | | | | | | | | | | | | | |
| HTDL14 | 55 | 170 | 0,0122 | | | | 76800 | | | | 16811 | | | | 6015 | | | | 7546 |
| HTDL14 | 85 | 170 | 0,0122 | | | | 121600 | | | | 26617 | | | | 9238 | | | | 11662 |
| HTDL14 | 115 | 170 | 0,0122 | | | | 163200 | | | | 35723 | | | | 12675 | | | | 15778 |
| HTDL14 | 170 | 170 | 0,0122 | | | | 246400 | | | | 53935 | | | | 18905 | | | | 23324 |
| | | | | | | | | | | | | | | | | | | | |
| STD5 | 10 | 150 | 0,0038 | 0,0029 | | | 3720 | 2911 | | | 826 | 383 | | | 413 | 287 | | | 392 |
| STD5 | 15 | 150 | 0,0038 | 0,0029 | | | 5580 | 4635 | | | 1239 | 610 | | | 619 | 457 | | | 588 |
| STD5 | 20 | 150 | 0,0038 | 0,0029 | | | 8060 | 6360 | | | 1789 | 837 | | | 895 | 627 | | | 784 |
| STD5 | 25 | 150 | 0,0038 | 0,0029 | | | 10540 | 8085 | | | 2340 | 1064 | | | 1170 | 798 | | | 980 |
| STD5 | 30 | 150 | 0,0038 | 0,0029 | | | 12400 | 9810 | | | 2753 | 1290 | | | 1376 | 968 | | | 1176 |
| STD5 | 50 | 150 | 0,0038 | 0,0029 | | | 21700 | 16709 | | | 4818 | 2198 | | | 2409 | 1648 | | | 1960 |
| | | | | | | | | | | | | | | | | | | | |
| STD8 | 10 | 150 | 0,0058 | 0,0043 | 0,0056 | 0,0057 | 4750 | 5827 | 4325 | 3563 | 1247 | 630 | 1152 | 935 | 624 | 473 | 576 | 468 | 728 |
| STD8 | 15 | 150 | 0,0058 | 0,0043 | 0,0056 | 0,0057 | 7600 | 9279 | 6920 | 5700 | 1995 | 1003 | 1843 | 1496 | 998 | 753 | 922 | 748 | 1092 |
| STD8 | 20 | 150 | 0,0058 | 0,0043 | 0,0056 | 0,0057 | 10450 | 12732 | 9515 | 7838 | 2743 | 1377 | 2534 | 2058 | 1372 | 1033 | 1267 | 1029 | 1456 |
| STD8 | 25 | 150 | 0,0058 | 0,0043 | 0,0056 | 0,0057 | 14250 | 16185 | 12975 | 10688 | 3741 | 1750 | 3456 | 2806 | 1871 | 1313 | 1728 | 1403 | 1820 |
| STD8 | 30 | 150 | 0,0058 | 0,0043 | 0,0056 | 0,0057 | 17100 | 19638 | 15570 | 12825 | 4489 | 2123 | 4147 | 3367 | 2245 | 1593 | 2074 | 1683 | 2184 |
| STD8 | 50 | 150 | 0,0058 | 0,0043 | 0,0056 | 0,0057 | 29450 | 33449 | 26815 | 22088 | 7731 | 3617 | 7142 | 5799 | 3866 | 2713 | 3571 | 2899 | 3640 |
| STD8 | 85 | 150 | 0,0058 | 0,0043 | 0,0056 | 0,0057 | 50350 | 57619 | 45845 | 37763 | 13218 | 6230 | 12211 | 9914 | 6609 | 4673 | 6106 | 4957 | 6188 |
| STD8 | 100 | 150 | 0,0058 | 0,0043 | 0,0056 | 0,0057 | 59850 | 67977 | 54495 | 44888 | 15712 | 7350 | 14515 | 11784 | 7856 | 5513 | 7258 | 5892 | 7280 |
| STD8 | 150 | 150 | 0,0058 | 0,0043 | 0,0056 | 0,0057 | 90250 | 102505 | 82175 | 67688 | 23693 | 11083 | 21888 | 17770 | 11847 | 8313 | 10944 | 8885 | 10920 |

## Inch pitches

XL

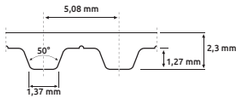


L

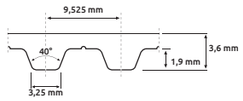


H

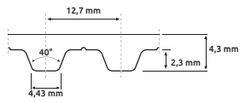


XH

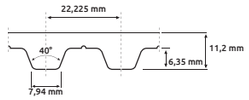


| Pitch | Standard width | Standard width | max. width | Specific belt weight | | | Ultimate tensile strength | | | Allowable belt force open ended | | | Allowable belt force endless welded | | | Allowable effective force |
|---|---|---|---|---|---|---|---|---|---|---|---|---|---|---|---|---|
| | | | | msp (kg/m/mm) | | | Fbreak (N) | | | F1all (N) | | | F1all (N) | | | Feall |
| | (Inch) | mm | | Steel | Aramid | HF | Steel | Aramid | HF | Steel | Aramid | HF | Steel | Aramid | HF | min.Z15 |
| XL | 0,25 | 6,35 | 150 | 0,0022 | 0,0019 | | 750 | 976 | | 190 | 213 | | 95 | 159 | | 200 |
| XL | 0,31 | 7,94 | 150 | 0,0022 | 0,0019 | | 875 | 1238 | | 221 | 270 | | 111 | 202 | | 248 |
| XL | 0,37 | 9,53 | 150 | 0,0022 | 0,0019 | | 1125 | 1525 | | 284 | 332 | | 142 | 249 | | 300 |
| XL | 0,50 | 12,70 | 150 | 0,0022 | 0,0019 | | 1625 | 2074 | | 411 | 452 | | 205 | 339 | | 400 |
| XL | 0,75 | 19,05 | 150 | 0,0022 | 0,0019 | | 2500 | 3172 | | 632 | 691 | | 316 | 518 | | 600 |
| XL | 1 | 25,40 | 150 | 0,0022 | 0,0019 | | 3375 | 4270 | | 853 | 930 | | 427 | 698 | | 800 |
| XL | 2 | 50,80 | 150 | 0,0022 | 0,0019 | | 6875 | 8662 | | 1738 | 1887 | | 869 | 1415 | | 1600 |
| XL | 4 | 101,60 | 150 | 0,0022 | 0,0019 | | 13875 | 17300 | | 3509 | 3770 | | 1754 | 2800 | | 3200 |
| | | | | | | | | | | | | | | | | |
| L | 0,37 | 9,53 | 150 | 0,0035 | 0,0030 | | 2280 | 2672 | | 574 | 428 | | 287 | 321 | | 600 |
| L | 0,50 | 12,70 | 150 | 0,0035 | 0,0030 | | 3135 | 3674 | | 790 | 588 | | 395 | 441 | | 800 |
| L | 0,75 | 19,05 | 150 | 0,0035 | 0,0030 | | 4845 | 5678 | | 1221 | 909 | | 610 | 681 | | 1200 |
| L | 1 | 25,40 | 150 | 0,0035 | 0,0030 | | 6555 | 7682 | | 1652 | 1229 | | 826 | 922 | | 1600 |
| L | 1,5 | 38,10 | 150 | 0,0035 | 0,0030 | | 9975 | 11690 | | 2513 | 1871 | | 1257 | 1403 | | 2400 |
| L | 2 | 50,80 | 150 | 0,0035 | 0,0030 | | 13395 | 15698 | | 3375 | 2512 | | 1687 | 1884 | | 3200 |
| L | 4 | 101,6 | 150 | 0,0035 | 0,0030 | | 27075 | 31730 | | 6821 | 5078 | | 3411 | 3808 | | 6400 |
| | | | | | | | | | | | | | | | | |
| H | 0,50 | 12,70 | 152,4 | 0,0040 | 0,0032 | 0,0043 | 3360 | 3773 | 4960 | 912 | 504 | 1119 | 456 | 378 | 559 | 980 |
| H | 0,75 | 19,05 | 152,4 | 0,0040 | 0,0032 | 0,0043 | 5040 | 5929 | 7440 | 1369 | 792 | 1678 | 684 | 594 | 839 | 1470 |
| H | 1 | 25,40 | 152,4 | 0,0040 | 0,0032 | 0,0043 | 7140 | 8085 | 10540 | 1939 | 1081 | 2377 | 970 | 810 | 1189 | 1960 |
| H | 1,5 | 38,10 | 152,4 | 0,0040 | 0,0032 | 0,0043 | 10920 | 12397 | 16120 | 2966 | 1657 | 3636 | 1483 | 1243 | 1818 | 2940 |
| H | 2 | 50,80 | 152,4 | 0,0040 | 0,0032 | 0,0043 | 14700 | 16709 | 21700 | 3992 | 2233 | 4895 | 1996 | 1675 | 2447 | 3920 |
| H | 3 | 76,20 | 152,4 | 0,0040 | 0,0032 | 0,0043 | 22260 | 25333 | 32860 | 6045 | 3386 | 7412 | 3023 | 2593 | 3706 | 5880 |
| H | 4 | 101,6 | 152,4 | 0,0040 | 0,0032 | 0,0043 | 29820 | 33957 | 44020 | 8098 | 4538 | 9929 | 4049 | 3404 | 4965 | 7840 |
| H | 6 | 152,4 | 152,4 | 0,0040 | 0,0032 | 0,0043 | 44940 | 51205 | 66340 | 12205 | 6843 | 14964 | 6102 | 5132 | 7482 | 11760 |
| | | | | | | | | | | | | | | | | |
| XH | 1 | 25,40 | 152,4 | 0,0106 | 0,0091 | | 14250 | 16185 | | 3801 | 1778 | | 1900 | 1334 | | 3910 |
| XH | 1,5 | 38,10 | 152,4 | 0,0106 | 0,0091 | | 21850 | 24817 | | 5828 | 2726 | | 2914 | 2045 | | 5865 |
| XH | 2 | 50,80 | 152,4 | 0,0106 | 0,0091 | | 29450 | 33449 | | 7855 | 3675 | | 3928 | 2756 | | 7820 |
| XH | 3 | 76,20 | 152,4 | 0,0106 | 0,0091 | | 44650 | 50713 | | 11909 | 5571 | | 5955 | 4178 | | 11730 |
| XH | 4 | 101,6 | 152,4 | 0,0106 | 0,0091 | | 59850 | 67977 | | 15944 | 7468 | | 7982 | 5601 | | 15640 |
| XH | 6 | 152,4 | 152,4 | 0,0106 | 0,0091 | | 90250 | 102505 | | 24072 | 11261 | | | | | 23460 |

| T 2,5 | |
|---|---|
| Length | Teeth |
| 120 | 48 |
| 145 | 58 |
| 160 | 64 |
| 177,5 | 71 |
| 180 | 72 |
| 182,5 | 73 |
| 200 | 80 |
| 210 | 84 |
| 230 | 92 |
| 245 | 98 |
| 265 | 106 |
| 277,5 | 111 |
| 285 | 114 |
| 290 | 116 |
| 305 | 122 |
| 317,5 | 127 |
| 330 | 132 |
| 342,5 | 137 |
| 380 | 152 |
| 420 | 168 |
| 480 | 192 |
| 500 | 200 |
| 540 | 216 |
| 600 | 240 |
| 620 | 248 |
| 650 | 260 |
| 680 | 272 |
| 700 | 280 |
| 780 | 312 |
| 880 | 352 |
| 915 | 366 |
| 950 | 380 |
| 1185 | 474 |

| T 5 | |
|---|---|
| Length | Teeth |
| 120 | 24 |
| 150 | 30 |
| 165 | 33 |
| 180 | 36 |
| 185 | 37 |
| 200 | 40 |
| 210 | 42 |
| 215 | 43 |
| 220 | 44 |
| 225 | 45 |
| 245 | 49 |
| 250 | 50 |
| 255 | 51 |
| 260 | 52 |
| 270 | 54 |
| 275 | 55 |
| 280 | 56 |
| 295 | 59 |
| 300 | 60 |
| 305 | 61 |
| 320 | 64 |
| 325 | 65 |
| 330 | 66 |
| 340 | 68 |
| 350 | 70 |
| 355 | 71 |
| 360 | 72 |
| 365 | 73 |
| 375 | 75 |
| 395 | 79 |
| 400 | 80 |
| 410 | 82 |
| 420 | 84 |
| 425 | 85 |
| 430 | 86 |
| 440 | 88 |
| 445 | 89 |
| 450 | 90 |
| 455 | 91 |
| 460 | 92 |
| 475 | 95 |
| 480 | 96 |
| 500 | 100 |
| 515* | 103 |
| 525 | 105 |
| 545 | 109 |
| 550 | 110 |
| 560* | 112 |
| 575 | 115 |
| 590 | 118 |
| 600 | 120 |
| 610 | 122 |
| 620 | 124 |

| T 5 | |
|---|---|
| Length | Teeth |
| 625 | 125 |
| 630 | 126 |
| 640 | 128 |
| 650 | 130 |
| 660 | 132 |
| 675 | 135 |
| 690 | 138 |
| 700 | 140 |
| 720 | 144 |
| 725 | 145 |
| 750 | 150 |
| 765 | 153 |
| 780 | 156 |
| 800 | 160 |
| 815 | 163 |
| 830 | 166 |
| 840 | 168 |
| 850 | 170 |
| 860 | 172 |
| 885 | 177 |
| 920 | 184 |
| 940 | 188 |
| 990 | 198 |
| 1000 | 200 |
| 1075 | 215 |
| 1100 | 220 |
| 1115 | 223 |
| 1140 | 228 |
| 1160 | 232 |
| 1200 | 240 |
| 1215 | 243 |
| 1275 | 255 |
| 1280 | 256 |
| 1315 | 263 |
| 1350 | 270 |
| 1355 | 271 |
| 1380 | 276 |
| 1440 | 288 |
| 1470 | 294 |
| 1500 | 300 |
| 1580 | 316 |
| 1955 | 391 |

| T 10 | |
|---|---|
| Length | Teeth |
| 260 | 26 |
| 320 | 32 |
| 340 | 34 |
| 350 | 35 |
| 370 | 37 |
| 390 | 39 |
| 400 | 40 |
| 410 | 41 |
| 440 | 44 |
| 450 | 45 |
| 480 | 48 |
| 500 | 50 |
| 530 | 53 |
| 550 | 55 |
| 560 | 56 |
| 600* | 60 |
| 610 | 61 |
| 630* | 63 |
| 650 | 65 |
| 660 | 66 |
| 680 | 68 |
| 690 | 69 |
| 700 | 70 |
| 720* | 72 |
| 730 | 73 |
| 750 | 75 |
| 780 | 78 |
| 800* | 80 |
| 810 | 81 |
| 840 | 84 |
| 850 | 85 |
| 880 | 88 |
| 890 | 89 |
| 900* | 90 |
| 910 | 91 |
| 920* | 92 |
| 950 | 95 |
| 960 | 96 |
| 970 | 97 |
| 980 | 98 |
| 1000 | 100 |
| 1010 | 101 |
| 1050 | 105 |
| 1080 | 108 |
| 1100 | 110 |
| 1110 | 111 |
| 1140 | 114 |
| 1150 | 115 |
| 1200 | 120 |
| 1210 | 121 |
| 1240 | 124 |
| 1250 | 125 |
| 1300 | 130 |

| T 10 | |
|---|---|
| Length | Teeth |
| 1320 | 132 |
| 1350 | 135 |
| 1390 | 139 |
| 1400 | 140 |
| 1420 | 142 |
| 1440 | 144 |
| 1450 | 145 |
| 1460 | 146 |
| 1500 | 150 |
| 1560 | 156 |
| 1600 | 160 |
| 1610 | 161 |
| 1700 | 170 |
| 1750 | 175 |
| 1780 | 178 |
| 1800 | 180 |
| 1880 | 188 |
| 1960 | 196 |
| 2250 | 225 |

* Without groove in the tooth gap, aramid tension cord possible with minimum purchase available on request.

Length in mm
Max. belt width 400 mm
Further dimensions on request.

| AT 5 | |
|---|---|
| Length | Teeth |
| 225 | 45 |
| 255 | 51 |
| 275 | 55 |
| 280 | 56 |
| 300 | 60 |
| 330 | 66 |
| 340 | 68 |
| 375 | 75 |
| 390 | 78 |
| 420 | 84 |
| 450 | 90 |
| 455 | 91 |
| 480 | 96 |
| 500 | 100 |
| 525 | 105 |
| 545 | 109 |
| 600 | 120 |
| 610 | 122 |
| 620 | 124 |
| 630 | 126 |
| 660 | 132 |
| 670 | 134 |
| 710 | 142 |
| 720 | 144 |
| 750 | 150 |
| 780 | 156 |
| 825 | 165 |
| 860 | 172 |
| 975 | 195 |
| 1050 | 210 |
| 1125 | 225 |
| 1500 | 300 |
| 2000 | 400 |

| AT 20 | |
|---|---|
| Length | Teeth |
| 1000 | 50 |

| AT 10 | |
|---|---|
| Length | Teeth |
| 370 | 37 |
| 500 | 50 |
| 530 | 53 |
| 560 | 56 |
| 580 | 58 |
| 600 | 60 |
| 610 | 61 |
| 630 | 63 |
| 660 | 66 |
| 700 | 70 |
| 730 | 73 |
| 780 | 78 |
| 800 | 80 |
| 810 | 81 |
| 840 | 84 |
| 880 | 88 |
| 890 | 89 |
| 920 | 92 |
| 960 | 96 |
| 980 | 98 |
| 1000 | 100 |
| 1010 | 101 |
| 1050 | 105 |
| 1080 | 108 |
| 1100 | 110 |
| 1150 | 115 |
| 1190 | 119 |
| 1200 | 120 |
| 1210 | 121 |
| 1220 | 122 |
| 1230 | 123 |
| 1240 | 124 |
| 1250 | 125 |
| 1280 | 128 |
| 1300 | 130 |
| 1320 | 132 |
| 1350 | 135 |
| 1360 | 136 |
| 1400 | 140 |
| 1420 | 142 |
| 1480 | 148 |
| 1500 | 150 |
| 1600 | 160 |
| 1630 | 163 |
| 1700 | 170 |
| 1720 | 172 |
| 1800 | 180 |
| 1860 | 186 |
| 1940 | 194 |

| T 2,5 DL | |
|---|---|
| Length | Teeth |
| 457,5 | 183 |

| T 5 DL | |
|---|---|
| Length | Teeth |
| 300 | 60 |
| 350 | 70 |
| 400 | 80 |
| 410 | 82 |
| 450 | 90 |
| 460 | 92 |
| 480 | 96 |
| 500 | 100 |
| 515 | 103 |
| 525 | 105 |
| 550 | 110 |
| 590 | 118 |
| 600 | 120 |
| 620 | 124 |
| 650 | 130 |
| 685 | 137 |
| 700 | 140 |
| 750 | 150 |
| 800 | 160 |
| 815 | 163 |
| 840 | 168 |
| 860 | 172 |
| 900 | 180 |
| 940 | 188 |
| 1100 | 220 |

| T 10 DL | |
|---|---|
| Length | Teeth |
| 260 | 26 |
| 530 | 53 |
| 600 | 60 |
| 630 | 63 |
| 660 | 66 |
| 700 | 70 |
| 720 | 72 |
| 750 | 75 |
| 800 | 80 |
| 840 | 84 |
| 900 | 90 |
| 920 | 92 |
| 980 | 98 |
| 1010 | 101 |
| 1100 | 110 |
| 1150 | 115 |
| 1240 | 124 |
| 1250 | 125 |
| 1320 | 132 |
| 1350 | 135 |
| 1400 | 140 |
| 1420 | 142 |
| 1500 | 150 |
| 1600 | 150 |
| 1610 | 161 |
| 1700 | 170 |
| 1800 | 180 |
| 1880 | 188 |

Length in mm
Max. belt width 400 mm
Further dimensions on request.

| MXL | | |
|---|---|---|
| Type | Length | Teeth |
| 480MXLPU | 121,9 | 60 |
| 560MXLPU | 142,2 | 70 |
| 576MXLPU | 146,3 | 72 |
| 600MXLPU | 152,4 | 75 |
| 608MXLPU | 154,4 | 76 |
| 632MXLPU | 160,5 | 79 |
| 640MXLPU | 162,5 | 80 |
| 656MXLPU | 166,6 | 82 |
| 704MXLPU | 178,8 | 88 |
| 728MXLPU | 184,9 | 91 |
| 736MXLPU | 186,9 | 92 |
| 768MXLPU | 195,1 | 96 |
| 808MXLPU | 205,2 | 101 |
| 816MXLPU | 207,2 | 102 |
| 824MXLPU | 209,2 | 103 |
| 840MXLPU | 213,4 | 105 |
| 880MXLPU | 223,5 | 110 |
| 912MXLPU | 231,6 | 114 |
| 944MXLPU | 239,7 | 118 |
| 960MXLPU | 243,8 | 120 |
| 1040MXLPU | 264,1 | 130 |
| 1056MXLPU | 268,2 | 132 |
| 1080MXLPU | 274,3 | 135 |
| 1120MXLPU | 284,4 | 140 |
| 1160MXLPU | 294,6 | 145 |
| 1200MXLPU | 304,8 | 150 |
| 1240MXLPU | 314,9 | 155 |
| 1400MXLPU | 355,6 | 175 |
| 1520MXLPU | 386,1 | 190 |
| 1600MXLPU | 406,4 | 200 |
| 1768MXLPU | 449,1 | 221 |
| 2048MXLPU | 520,1 | 256 |
| 2240MXLPU | 568,9 | 280 |
| 2280MXLPU | 579,1 | 285 |
| 2464MXLPU | 625,8 | 308 |
| 2656MXLPU | 674,6 | 332 |
| 2816MXLPU | 715,2 | 352 |
| 2880MXLPU | 731,5 | 360 |
| 3160MXLPU | 802,6 | 395 |
| 3240MXLPU | 822,9 | 405 |
| 3296MXLPU | 837,1 | 412 |
| 3456MXLPU | 877,8 | 432 |
| 3632MXLPU | 922,5 | 454 |
| 3880MXLPU | 985,5 | 485 |

| XL | | |
|---|---|---|
| Type | Length | Teeth |
| 60XLPU | 152,40 | 30 |
| 70XLPU | 177,80 | 35 |
| 76XLPU | 193,00 | 38 |
| 80XLPU | 203,20 | 40 |
| 84XLPU | 213,36 | 42 |
| 90XLPU | 228,60 | 45 |
| 94XLPU | 238,76 | 47 |
| 96XLPU | 243,84 | 48 |
| 100XLPU | 254,00 | 50 |
| 102XLPU | 259,08 | 51 |
| 104XLPU | 264,16 | 52 |
| 106XLPU | 269,24 | 53 |
| 110XLPU | 279,40 | 55 |
| 114XLPU | 289,56 | 57 |
| 116XLPU | 294,64 | 58 |
| 120XLPU | 304,80 | 60 |
| 124XLPU | 314,96 | 62 |
| 126XLPU | 320,04 | 63 |
| 128XLPU | 325,12 | 64 |
| 130XLPU | 330,20 | 65 |
| 134XLPU | 340,30 | 67 |
| 136XLPU | 345,44 | 68 |
| 140XLPU | 355,60 | 70 |
| 150XLPU | 381,00 | 75 |
| 152XLPU | 386,08 | 76 |
| 154XLPU | 391,16 | 77 |
| 160XLPU | 406,40 | 80 |
| 166XLPU | 421,64 | 83 |
| 168XLPU | 426,72 | 84 |
| 170XLPU | 431,80 | 85 |
| 180XLPU | 457,20 | 90 |
| 186XLPU | 472,44 | 93 |
| 190XLPU | 482,60 | 95 |
| 194XLPU | 492,70 | 97 |
| 200XLPU | 508,00 | 100 |
| 210XLPU | 533,40 | 105 |
| 212XLPU | 538,48 | 106 |
| 220XLPU | 558,80 | 110 |
| 230XLPU | 584,20 | 115 |
| 240XLPU | 609,60 | 120 |
| 250XLPU | 635,00 | 125 |
| 254XLPU | 645,16 | 127 |
| 260XLPU | 660,40 | 130 |
| 270XLPU | 685,80 | 135 |
| 288XLPU | 731,50 | 144 |
| 290XLPU | 736,60 | 145 |
| 300XLPU | 762,00 | 150 |
| 320XLPU | 812,80 | 160 |
| 330XLPU | 838,20 | 165 |
| 356XLPU | 904,20 | 178 |
| 360XLPU | 914,40 | 180 |
| 376XLPU | 955,04 | 188 |
| 384XLPU | 975,36 | 192 |
| 390XLPU | 990,60 | 195 |
| 414XLPU | 1051,50 | 207 |
| 450XLPU | 1143,00 | 225 |
| 460XLPU | 1168,40 | 230 |
| 480XLPU | 1219,20 | 240 |
| 512XLPU | 1300,48 | 256 |
| 550XLPU | 1397,00 | 275 |
| 564XLPU | 1432,56 | 282 |
| 566XLPU | 1437,60 | 283 |
| 630XLPU | 1600,20 | 315 |
| 670XLPU | 1701,80 | 335 |

| L | | |
|---|---|---|
| Type | Length | Teeth |
| 86LPU | 219,0 | 23 |
| 124LPU | 314,3 | 33 |
| 150LPU | 381,0 | 40 |
| 173LPU | 438,1 | 46 |
| 187LPU | 476,2 | 50 |
| 202LPU | 514,4 | 54 |
| 210LPU | 533,4 | 56 |
| 225LPU | 571,5 | 60 |
| 240LPU | 609,6 | 64 |
| 255LPU | 647,7 | 68 |
| 270LPU | 685,8 | 72 |
| 285LPU | 723,9 | 76 |
| 300LPU | 762,0 | 80 |
| 322LPU | 819,1 | 86 |
| 345LPU | 876,3 | 92 |
| 367LPU | 933,4 | 98 |
| 390LPU | 990,6 | 104 |
| 420LPU | 1066,8 | 112 |
| 450LPU | 1143,0 | 120 |
| 480LPU | 1219,2 | 128 |
| 510LPU | 1295,4 | 136 |
| 540LPU | 1371,6 | 144 |
| 570LPU | 1447,8 | 152 |
| 600LPU | 1524,0 | 160 |

| H | | |
|---|---|---|
| Type | Length | Teeth |
| 230HPU | 584,2 | 46 |
| 240HPU | 609,6 | 48 |
| 270HPU | 685,8 | 54 |
| 300HPU | 762,0 | 60 |
| 330HPU | 838,2 | 66 |
| 360HPU | 914,4 | 72 |
| 390HPU | 990,6 | 78 |
| 420HPU | 1066,8 | 84 |
| 450HPU | 1143,0 | 90 |
| 480HPU | 1219,2 | 96 |
| 510HPU | 1295,4 | 102 |

Length in mm
Max. belt width 300 mm
Further dimensions on request.

**Polyurethane wide timing belts**
**easy drive®** PU wide timing belts are made of abrasion-resistant polyurethane and high-strength aramid cords in widths up to 900mm. These timing belts are specially designed for synchronous transport applications. In view of the production width as well as outstanding mechanical and chemical properties, they can be used for many applications. Moreover, it is possible to use special materials such as, for example, polyurethane that is suitable for contact with foodstuffs, or a nylon coating on the tooth facing and back side.

**Properties and special features:**
- high-strength aramid tension cords
- parallel arrangement of tension cords for even distribution of tension
- form-fit, synchronous running
- low-noise, high abrasion resistance and flexibility
- different types of polymers are available, e.g. FDA approved
- large selection of coatings, profiles/cleats
- low shaft loading
- high acceleration without slippage
- easy to clean

**Applications:**
- as a substitute for transport belts for synchronous positioning
- applications in the foodstuffs industry
- sausage, meat and cheese processing
- conveying of bulk goods
- automatic production processes
- instead of modular transport belts

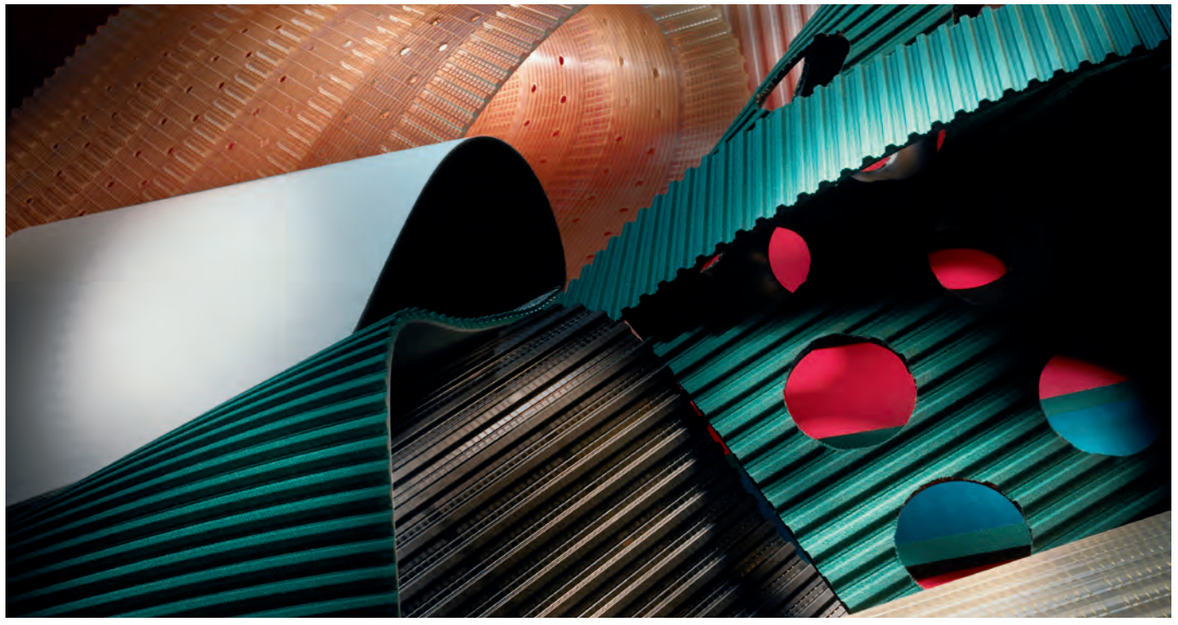

## General

| | WT5 | WT10 | WH |
|---|---|---|---|
| Tension cord | Kevlar | Kevlar | Kevlar |
| Colour | blue | transparent / blue | transparent |
| min. length -V in mm | 1000 | 1100 | 1105 |
| Slitting lane mm | | 64 | 63,5 |
| Full roll length in m | 100 | 60 | 61 |
| min. teeth without contra-flexure Zmin | 10 | 14 | 14 |
| min. diameter tension roller on tooth side mm | 30 | 60 | 60 |
| min.teeth with contra-flexure Zmin | 20 | 20 | 20 |
| min.diameter tension roller on backside mm | 50 | 80 | 80 |
| Polyamide fabric on tooth side PAZ | | x | x |
| Polyamide fabric on backside PAR | | x | x |
| Polyamide fabric on both sides PAZ/PAR | | x | x |
| FDA/EU approved (Kevlar cord) | x | x | x |

## Technical specifications

| Pitch | Standard width | max. width | Specific belt weight | Ultimate tensile strength | Allowable belt force open ended | Allowable belt force endless welded | Allowable effective force |
|---|---|---|---|---|---|---|---|
| | mm | mm | kg/m/mm | Fbreak (N) | F1all (N) | F1all (N) | Feall |
| | | | | | | | |
| WT5 | 200 | 500 | 0,0025 | 14800 | 4200 | 3150 | |
| WT5 | 300 | 500 | 0,0025 | 22200 | 6300 | 4725 | |
| | | | | | | | |
| WT10 | 150 | 500 | 0,0039 | 21021 | 3180 | 2385 | 7500 |
| WT10 | 200 | 500 | 0,0039 | 28028 | 4240 | 3180 | 10000 |
| WT10 | 250 | 500 | 0,0039 | 35574 | 5300 | 3975 | 12500 |
| WT10 | 300 | 500 | 0,0039 | 42581 | 6360 | 4770 | 15000 |
| WT10 | 450 | 500 | 0,0039 | 64141 | 9540 | 7155 | 22500 |
| | | | | | | | |
| WH | 152,4 | 500 | 0,0033 | 21021 | 3180 | 2385 | 8820 |
| WH | 203,2 | 500 | 0,0033 | 28028 | 4240 | 3180 | 11760 |
| WH | 254 | 500 | 0,0033 | 35574 | 5300 | 3975 | 14700 |
| WH | 304,8 | 500 | 0,0033 | 42581 | 6360 | 4770 | 17640 |
| WH | 457,2 | 500 | 0,0033 | 64141 | 9540 | 7155 | 26460 |

**Polyurethane Flex timing belts**
**easy drive®** PU Flex timing belts are extruded of abrasion-resistant polyurethane and high-strength steel cords, aramid cords or high flexible steel cords and VA steel with endless winded cords. In these belts the cords are helically spooled. These timing belts can be used for all kinds of power transmission applications because of their high power transfer, and their high flexibility make them suitable for synchronous transport and positioning applications. By using standard polyurethane and such other belt materials as polyurethane that is cold resistant, heat resistant or suitable for contact with foodstuffs a wide spectrum of applications is possible.

**Cords**
- Standard steel
- Special designs with aramid, high-flexible steel HF, reinforced steel L and stainless steel available upon request

**Special designs**
- double-sided toothing as of 1500mm length
- antistatic properties
- foodstuff-resistant PU compound
- polyamide fabric on tooth facing PAZ

**Applications**
- heavy load tasks
- high power transfer
- Foil machines
- Textile industry
- Conveyor systems
- Wood and glass industries

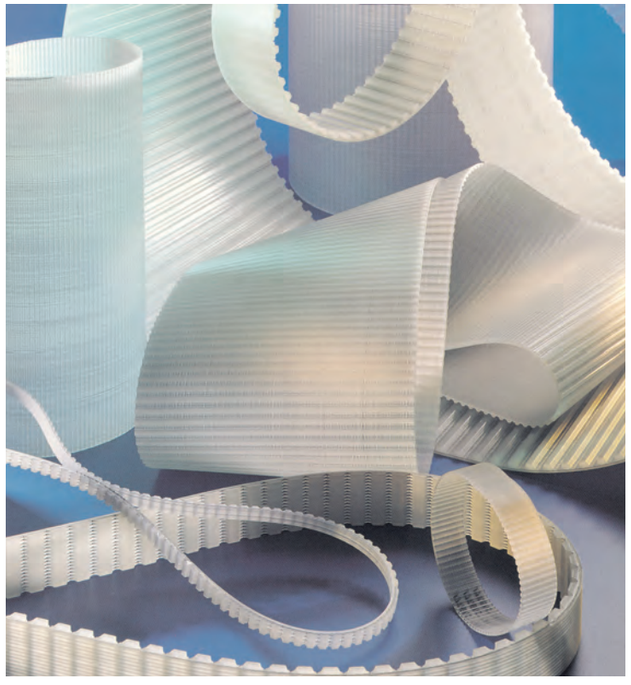

| | T5 | T10 | T20 | AT5 | AT10 | AT20 |
|---|---|---|---|---|---|---|
| min. length in mm up to 100 mm length | 800 | 800 | 900 | 800 | 800 | 900 |
| min. length in mm up to 150 mm length | 1500 | 1500 | 1500 | 1500 | 1500 | 1500 |
| max. length in mm | 23500 | 23500 | 23500 | 23500 | 23500 | 23500 |
| Width tolerance +/- in mm | 0,5 | 0,5 | 1 | 0,5 | 0,5 | 1 |
| Thickness tolerance +/- in mm | 0,2 | 0,2 | 0,2 | 0,2 | 0,2 | 0,2 |
| min. teeth without contra-flexure Zmin | 10 | 14 | 15 | 15 | 15 | 18 |
| min. diameter tension roller on tooth side mm | 30 | 60 | 120 | 25 | 50 | 120 |
| min. teeth with contra-flexure Zmin | 18 | 20 | 25 | 20 | 25 | 25 |
| min.diameter tension roller on backside mm | 30 | 60 | 120 | 50 | 120 | 180 |
| Double sided toothing available | x | x | x | x | x | x |

| | XL | L | H | XH |
|---|---|---|---|---|
| min. length in mm up to 100 mm length | 800 | 800 | 800 | 1500 |
| min. length in mm up to 150 mm length | | | | 1500 |
| max. length in mm | 22758 | 22758 | 22758 | 22758 |
| Width tolerance +/- in mm | 0,5 | 0,5 | 0,5 | 1 |
| Thickness tolerance +/- in mm | 0,2 | 0,2 | 0,2 | 0,2 |
| min. teeth without contra-flexure Zmin | 15 | 15 | 14 | 18 |
| min. diameter tension roller on tooth side mm | 30 | 60 | 60 | 150 |
| min. teeth with contra-flexure Zmin | 18 | 20 | 20 | 25 |
| min.diameter tension roller on backside mm | 30 | 60 | 80 | 180 |
| Double sided toothing available | | x | x | |

| | HTD5M | HTD8M | HTD14M | STD5 | STD8 | STD14 |
|---|---|---|---|---|---|---|
| min. length in mm up to 100 mm length | 800 | 800 | 1500 | 800 | 1500 | 1500 |
| min. length in mm up to 150 mm length | 1500 | 1500 | 1500 | 1500 | 1500 | |
| max. length in mm | 22768 | 22768 | 22768 | 22768 | 22768 | 22768 |
| Width tolerance +/- in mm | 0,5 | 1 | 1,5 | 0,5 | 1 | 1,5 |
| Thickness tolerance +/- in mm | 0,2 | 0,2 | 0,2 | 0,2 | 0,2 | 0,2 |
| min. teeth without contra-flexure Zmin | 16 | 18 | 25 | 14 | 20 | 32 |
| min. diameter tension roller on tooth side mm | 25 | 50 | 125 | 22 | 50 | 140 |
| min. teeth with contra-flexure Zmin | 16 | 18 | 25 | 14 | 20 | 32 |
| min.diameter tension roller on backside mm | 60 | 120 | 180 | 60 | 120 | 250 |
| Double sided toothing available | x | x | x | | x | |

**Neoprene timing belts,** produced in sophisticated manufacturing processes with state-of-the-art production technology, are made of chloroprene rubber with glass-fiber cords and protective fabric covering on the running surface. Based on the combination of these materials, the timing belts can be used as high-speed and high load-capacity machine drives with constant revolutions. Moreover, they are maintenance-free. Neoprene timing belts are designed for high performance, precise running properties and high operation reliability. They have outstanding mechanical, chemical and physical properties.

**easy drive® Neoprene timing belts** are available in open length and endless sleeves in nearly all lengths and width sizes. The guiding groove on the tooth side is milled subsequently.

**easy drive® timing belts endless (sleeve)** are vulcanized in special molds. These types of belts have very accurate pitch sizes along the entire belt and are particularly suitable for smooth running and high driving speeds.

**easy drive® Neoprene timing belts "M" open length**
Open length timing belts are preferably used in linear applications. They are available with glass-fiber cords or metal cords.

**Imperial profile**
Inch pitch sizes
MXL = 2,032 mm
XL = 5,08 mm
L = 9,525 mm
H = 12,7 mm
XH = 22,225 mm
XXH = 31,75 mm

**Double imperial profile**
Inch pitch sizes
DXL = 5,08 mm
DL = 9,525 mm
DH = 12,7 mm

**RPP profile**
2M, 3M, 5M, 8M, 14M, 20M

**HTD profile**
3M, 5M, 8M, 14M, 20M

**Double RPP / HTD profile**
D5M, D8M, D14M
D5M, D8M, D14M

**STD profile**
S2M, S3M, S5M, S8M, S14M

**Double STD profile**
DS2M, DS3M, DS8M, DS14M

| MXL Pitch 2,032 mm | | |
|---|---|---|
| Type | Length | Teeth |
| 456 | 115,82 | 57 |
| 464 | 117,86 | 58 |
| 480 | 121,92 | 60 |
| 488 | 123,95 | 61 |
| 536 | 136,14 | 67 |
| 544 | 138,18 | 68 |
| 560 | 142,24 | 70 |
| 568 | 144,27 | 71 |
| 576 | 146,30 | 72 |
| 600 | 152,40 | 75 |
| 608 | 154,43 | 76 |
| 632 | 160,53 | 79 |
| 640 | 162,56 | 80 |
| 656 | 166,62 | 82 |
| 664 | 168,66 | 83 |
| 672 | 170,69 | 84 |
| 680 | 172,72 | 85 |
| 704 | 178,82 | 88 |
| 720 | 182,88 | 90 |
| 728 | 184,91 | 91 |
| 736 | 186,94 | 92 |
| 752 | 191,01 | 94 |
| 760 | 193,04 | 95 |
| 776 | 197,10 | 97 |
| 800 | 203,20 | 100 |
| 808 | 205,23 | 101 |
| 816 | 207,26 | 102 |
| 824 | 209,30 | 103 |
| 840 | 213,36 | 105 |
| 848 | 215,39 | 106 |
| 856 | 217,42 | 107 |
| 864 | 219,46 | 108 |
| 880 | 223,52 | 110 |
| 896 | 227,58 | 112 |
| 904 | 229,62 | 113 |
| 912 | 231,65 | 114 |
| 920 | 233,68 | 115 |
| 944 | 239,80 | 118 |
| 952 | 241,80 | 119 |
| 960 | 243,84 | 120 |
| 976 | 247,90 | 122 |
| 984 | 249,94 | 123 |
| 1000 | 254,00 | 125 |
| 1008 | 256,03 | 126 |
| 1016 | 258,10 | 127 |
| 1040 | 264,16 | 130 |
| 1056 | 268,22 | 132 |

| MXL Pitch 2,032 mm | | |
|---|---|---|
| Type | Length | Teeth |
| 1072 | 272,29 | 134 |
| 1080 | 274,32 | 135 |
| 1112 | 282,45 | 139 |
| 1120 | 284,48 | 140 |
| 1136 | 288,54 | 142 |
| 1176 | 298,70 | 147 |
| 1184 | 300,74 | 148 |
| 1200 | 304,80 | 150 |
| 1224 | 310,90 | 153 |
| 1272 | 323,09 | 159 |
| 1280 | 325,12 | 160 |
| 1320 | 335,28 | 165 |
| 1360 | 345,44 | 170 |
| 1400 | 355,60 | 175 |
| 1440 | 365,76 | 180 |
| 1472 | 373,89 | 184 |
| 1520 | 386,08 | 190 |
| 1560 | 396,24 | 195 |
| 1600 | 406,40 | 200 |
| 1680 | 426,70 | 210 |
| 1696 | 430,80 | 212 |
| 1786 | 449,07 | 221 |
| 1800 | 457,20 | 225 |
| 1832 | 465,30 | 229 |
| 1856 | 471,40 | 232 |
| 1888 | 479,55 | 236 |
| 1984 | 503,94 | 248 |
| 1992 | 505,97 | 249 |
| 2008 | 510,03 | 251 |
| 2048 | 520,19 | 256 |
| 2144 | 544,58 | 268 |
| 2240 | 568,96 | 280 |
| 2360 | 599,40 | 295 |
| 2384 | 605,54 | 298 |
| 2480 | 629,92 | 310 |
| 2496 | 634,00 | 312 |
| 2520 | 640,08 | 315 |
| 2584 | 656,30 | 323 |
| 2680 | 680,72 | 335 |
| 2776 | 705,10 | 347 |
| 2864 | 727,50 | 358 |
| 2880 | 731,52 | 360 |
| 2920 | 741,68 | 365 |
| 2976 | 755,90 | 372 |
| 3024 | 768,10 | 378 |
| 3064 | 778,30 | 383 |
| 3104 | 788,40 | 388 |
| 3200 | 812,80 | 400 |

| MXL Pitch 2,032 mm | | |
|---|---|---|
| Type | Length | Teeth |
| 3296 | 837,20 | 412 |
| 3424 | 869,70 | 428 |
| 3472 | 881,89 | 434 |
| 3480 | 883,90 | 435 |
| 3520 | 894,10 | 440 |
| 3624 | 920,50 | 453 |
| 3632 | 922,50 | 454 |
| 3704 | 940,82 | 463 |
| 3944 | 1001,80 | 493 |
| 3984 | 1011,90 | 498 |
| 4000 | 1016,00 | 500 |
| 4040 | 1026,16 | 505 |
| 4064 | 1032,30 | 508 |
| 4200 | 1066,80 | 525 |
| 4280 | 1087,10 | 535 |
| 4320 | 1097,30 | 540 |
| 4456 | 1131,80 | 557 |
| 4736 | 1202,90 | 592 |
| 4800 | 1219,20 | 600 |
| 5224 | 1326,98 | 653 |

**Standard widths**

| | | |
|---|---|---|
| 3/4" | ~ 19,05 mm | Code-No. 075 |
| 1" | ~ 25,40 mm | Code-No. 100 |
| 1 1/2" | ~ 38,10 mm | Code-No. 150 |
| 2" | ~ 50,80 mm | Code-No. 200 |
| 3" | ~ 76,20 mm | Code-No. 300 |
| 4" | ~ 101,6 mm | Code-No. 400 |
| 5" | ~ 127,0 mm | Code-No. 500 |

Length in mm
Other width available
Max. belt width ~ 470 mm.

| XL Pitch 5,08 mm | | |
|---|---|---|
| Type | Length | Teeth |
| 54 | 137,20 | 27 |
| 60 | 152,40 | 30 |
| 70 | 177,80 | 35 |
| 80 | 203,20 | 40 |
| 86 | 218,44 | 43 |
| 88 | 223,52 | 44 |
| 90 | 228,60 | 45 |
| 92 | 233,68 | 46 |
| 94 | 238,76 | 47 |
| 96 | 243,84 | 48 |
| 98 | 248,90 | 49 |
| 100 | 254,00 | 50 |
| 102 | 259,08 | 51 |
| 104 | 264,20 | 52 |
| 106 | 269,24 | 53 |
| 108 | 274,32 | 54 |
| 110 | 279,40 | 55 |
| 112 | 284,48 | 56 |
| 116 | 294,64 | 58 |
| 118 | 299,72 | 59 |
| 120 | 304,80 | 60 |
| 124 | 314,96 | 62 |
| 126 | 320,04 | 63 |
| 128 | 325,12 | 64 |
| 130 | 330,20 | 65 |
| 134 | 340,36 | 67 |
| 136 | 345,44 | 68 |
| 138 | 350,52 | 69 |
| 140 | 355,60 | 70 |
| 142 | 360,68 | 71 |
| 146 | 370,80 | 73 |
| 148 | 375,92 | 74 |
| 150 | 381,00 | 75 |
| 156 | 396,24 | 78 |
| 160 | 406,40 | 80 |
| 162 | 411,48 | 81 |
| 166 | 421,40 | 83 |
| 168 | 426,72 | 84 |
| 170 | 431,80 | 85 |
| 174 | 441,96 | 87 |
| 176 | 447,04 | 88 |
| 178 | 452,12 | 89 |
| 180 | 457,20 | 90 |
| 182 | 462,28 | 91 |
| 184 | 467,36 | 92 |
| 188 | 477,52 | 94 |
| 190 | 482,60 | 95 |

| XL Pitch 5,08 mm | | |
|---|---|---|
| Type | Length | Teeth |
| 192 | 487,68 | 96 |
| 194 | 492,76 | 97 |
| 196 | 497,84 | 98 |
| 198 | 502,90 | 99 |
| 200 | 508,00 | 100 |
| 202 | 513,10 | 101 |
| 210 | 533,40 | 105 |
| 212 | 538,50 | 106 |
| 214 | 543,60 | 107 |
| 220 | 558,80 | 110 |
| 228 | 579,10 | 114 |
| 230 | 584,20 | 115 |
| 234 | 594,40 | 117 |
| 240 | 609,60 | 120 |
| 244 | 619,76 | 122 |
| 248 | 629,92 | 124 |
| 250 | 635,00 | 125 |
| 260 | 660,40 | 130 |
| 270 | 685,80 | 135 |
| 272 | 690,88 | 136 |
| 274 | 695,96 | 137 |
| 276 | 701,00 | 138 |
| 280 | 711,20 | 140 |
| 286 | 726,44 | 143 |
| 290 | 736,60 | 145 |
| 296 | 751,84 | 148 |
| 300 | 762,00 | 150 |
| 306 | 777,24 | 153 |
| 310 | 787,40 | 155 |
| 316 | 802,64 | 158 |
| 320 | 812,80 | 160 |
| 322 | 817,88 | 161 |
| 330 | 838,20 | 165 |
| 340 | 863,60 | 170 |
| 344 | 873,76 | 172 |
| 350 | 889,00 | 175 |
| 360 | 914,40 | 180 |
| 380 | 965,20 | 190 |
| 382 | 970,28 | 191 |
| 388 | 985,52 | 194 |
| 390 | 990,60 | 195 |
| 392 | 995,68 | 196 |
| 412 | 1046,48 | 206 |
| 414 | 1051,56 | 207 |
| 432 | 1097,28 | 216 |
| 434 | 1102,36 | 217 |
| 438 | 1112,52 | 219 |

| XL Pitch 5,08 mm | | |
|---|---|---|
| Type | Length | Teeth |
| 460 | 1168,40 | 230 |
| 498 | 1264,92 | 249 |
| 506 | 1285,24 | 253 |
| 514 | 1305,56 | 257 |
| 530 | 1346,20 | 265 |
| 580 | 1473,20 | 290 |
| 600 | 1524,00 | 300 |
| 630 | 1600,20 | 315 |
| 710 | 1803,40 | 355 |

**Standard widths**

| | | |
|---|---|---|
| 3/4" | ~ 19,05 mm | Code-No. 075 |
| 1" | ~ 25,40 mm | Code-No. 100 |
| 1 1/2" | ~ 38,10 mm | Code-No. 150 |
| 2" | ~ 50,80 mm | Code-No. 200 |
| 3" | ~ 76,20 mm | Code-No. 300 |
| 4" | ~ 101,6 mm | Code-No. 400 |
| 5" | ~ 127,0 mm | Code-No. 500 |

Length in mm
Other width available
Max. belt width ~ 470 mm.

| L<br>Pitch 9,525 mm | | |
|---|---|---|
| Type | Length | Teeth |
| 109 | 276,23 | 29 |
| 124 | 314,33 | 33 |
| 150 | 381,00 | 40 |
| 165 | 419,10 | 44 |
| 169 | 428,63 | 45 |
| 173 | 438,15 | 46 |
| 187 | 476,25 | 50 |
| 202 | 514,40 | 54 |
| 210 | 533,40 | 56 |
| 225 | 571,50 | 60 |
| 232 | 590,55 | 62 |
| 236 | 600,08 | 63 |
| 240 | 609,60 | 64 |
| 255 | 647,70 | 68 |
| 263 | 666,75 | 70 |
| 270 | 685,80 | 72 |
| 285 | 723,90 | 76 |
| 300 | 762,00 | 80 |
| 322 | 819,15 | 86 |
| 334 | 848,40 | 89 |
| 345 | 876,30 | 92 |
| 360 | 914,40 | 96 |
| 367 | 933,45 | 98 |
| 375 | 952,50 | 100 |
| 390 | 990,60 | 104 |
| 405 | 1028,70 | 108 |
| 420 | 1066,80 | 112 |
| 424 | 1076,33 | 113 |
| 427 | 1085,85 | 114 |
| 435 | 1104,90 | 116 |
| 439 | 1114,43 | 117 |
| 450 | 1143,00 | 120 |
| 454 | 1152,53 | 121 |
| 480 | 1219,20 | 128 |
| 510 | 1295,40 | 136 |
| 525 | 1333,50 | 140 |
| 540 | 1371,60 | 144 |
| 600 | 1524,00 | 160 |
| 630 | 1600,20 | 168 |
| 660 | 1676,40 | 176 |
| 728 | 1847,90 | 194 |
| 817 | 2076,50 | 218 |

| H<br>Pitch 12,7 mm | | |
|---|---|---|
| Type | Length | Teeth |
| 230 | 584,20 | 46 |
| 240 | 609,60 | 48 |
| 255 | 647,70 | 51 |
| 270 | 685,80 | 54 |
| 280 | 711,20 | 56 |
| 300 | 762,00 | 60 |
| 310 | 787,40 | 62 |
| 315 | 800,10 | 63 |
| 320 | 812,80 | 64 |
| 330 | 838,20 | 66 |
| 335 | 850,90 | 67 |
| 340 | 863,60 | 68 |
| 350 | 889,00 | 70 |
| 360 | 914,40 | 72 |
| 370 | 939,80 | 74 |
| 375 | 952,50 | 75 |
| 390 | 990,60 | 78 |
| 400 | 1016,00 | 80 |
| 410 | 1041,40 | 82 |
| 420 | 1066,80 | 84 |
| 430 | 1092,20 | 86 |
| 450 | 1143,00 | 90 |
| 465 | 1181,10 | 93 |
| 480 | 1219,20 | 96 |
| 490 | 1244,60 | 98 |
| 510 | 1295,40 | 102 |
| 520 | 1320,80 | 104 |
| 530 | 1346,20 | 106 |
| 540 | 1371,60 | 108 |
| 560 | 1422,40 | 112 |
| 570 | 1447,80 | 114 |
| 580 | 1473,20 | 116 |
| 600 | 1524,00 | 120 |
| 630 | 1600,20 | 126 |
| 650 | 1651,00 | 130 |
| 660 | 1676,40 | 132 |
| 670 | 1701,80 | 134 |
| 680 | 1727,20 | 136 |
| 700 | 1778,00 | 140 |
| 720 | 1828,80 | 144 |
| 725 | 1841,50 | 145 |
| 730 | 1854,20 | 146 |
| 750 | 1905,00 | 150 |
| 770 | 1955,80 | 154 |
| 800 | 2032,00 | 160 |
| 810 | 2057,40 | 162 |
| 820 | 2082,80 | 164 |
| 850 | 2159,00 | 170 |
| 860 | 2184,40 | 172 |

| H<br>Pitch 12,7 mm | | |
|---|---|---|
| Type | Length | Teeth |
| 900 | 2286,00 | 180 |
| 950 | 2413,00 | 190 |
| 1000 | 2540,00 | 200 |
| 1100 | 2794,00 | 220 |
| 1120 | 2844,80 | 224 |
| 1140 | 2895,60 | 228 |
| 1150 | 2921,00 | 230 |
| 1250 | 3175,00 | 250 |
| 1400 | 3556,00 | 280 |
| 1645 | 4178,30 | 329 |
| 1700 | 4318,00 | 340 |

| XH<br>Pitch 22,225 mm | | |
|---|---|---|
| Type | Length | Teeth |
| 507 | 1289,05 | 58 |
| 534 | 1356,40 | 61 |
| 560 | 1422,40 | 64 |
| 630 | 1600,20 | 72 |
| 700 | 1778,00 | 80 |
| 770 | 1955,80 | 88 |
| 840 | 2133,60 | 96 |
| 980 | 2489,20 | 112 |
| 1120 | 2844,80 | 128 |
| 1260 | 3200,40 | 144 |
| 1400 | 3556,00 | 160 |
| 1540 | 3911,60 | 176 |
| 1750 | 4445,00 | 200 |

| XXH<br>Pitch 31,75 mm | | |
|---|---|---|
| Type | Length | Teeth |
| 700 | 1778,00 | 56 |
| 800 | 2032,00 | 64 |
| 900 | 2286,00 | 72 |
| 1000 | 2540,00 | 80 |
| 1200 | 3048,00 | 96 |
| 1400 | 3556,00 | 112 |
| 1600 | 4064,00 | 128 |
| 1800 | 4572,00 | 144 |

**Standard widths**

| | | |
|---|---|---|
| 3/4" | ~ 19,05 mm | Code-No. 075 |
| 1" | ~ 25,40 mm | Code-No. 100 |
| 1 1/2" | ~ 38,10 mm | Code-No. 150 |
| 2" | ~ 50,80 mm | Code-No. 200 |
| 3" | ~ 76,20 mm | Code-No. 300 |
| 4" | ~ 101,6 mm | Code-No. 400 |
| 5" | ~ 127,0 mm | Code-No. 500 |

Length in mm
Other width available
Max. belt width ~ 470 mm.

| DXL<br>Pitch 5,08 mm | | |
|---|---|---|
| Type | Length | Teeth |
| 120 | 304,80 | 60 |
| 130 | 330,20 | 65 |
| 140 | 355,60 | 70 |
| 146 | 370,80 | 73 |
| 150 | 381,00 | 75 |
| 156 | 396,20 | 78 |
| 160 | 406,40 | 80 |
| 170 | 431,80 | 85 |
| 176 | 447,00 | 88 |
| 180 | 457,20 | 90 |
| 182 | 462,30 | 91 |
| 188 | 477,50 | 94 |
| 190 | 482,60 | 95 |
| 198 | 502,90 | 99 |
| 200 | 508,00 | 100 |
| 202 | 513,10 | 101 |
| 210 | 533,40 | 105 |
| 212 | 538,50 | 106 |
| 214 | 543,60 | 107 |
| 220 | 558,80 | 110 |
| 228 | 579,10 | 114 |
| 230 | 584,20 | 115 |
| 234 | 594,40 | 117 |
| 240 | 609,60 | 120 |
| 250 | 635,00 | 125 |
| 260 | 660,40 | 130 |
| 270 | 685,80 | 135 |
| 276 | 701,00 | 138 |
| 280 | 711,20 | 140 |
| 290 | 736,60 | 145 |
| 300 | 762,00 | 150 |
| 310 | 787,40 | 155 |
| 316 | 802,60 | 158 |
| 320 | 812,80 | 160 |
| 330 | 838,20 | 165 |
| 344 | 873,80 | 172 |
| 352 | 894,10 | 176 |
| 364 | 924,60 | 182 |
| 380 | 965,20 | 190 |
| 384 | 975,40 | 192 |
| 388 | 985,50 | 194 |
| 390 | 990,60 | 195 |
| 392 | 995,70 | 196 |
| 434 | 1102,40 | 217 |
| 460 | 1168,40 | 230 |
| 530 | 1346,20 | 265 |
| 600 | 1524,00 | 300 |
| 710 | 1803,40 | 355 |

| DL<br>Pitch 5,08 mm | | |
|---|---|---|
| Type | Length | Teeth |
| 124 | 314,30 | 33 |
| 135 | 342,90 | 36 |
| 150 | 381,00 | 40 |
| 173 | 438,20 | 46 |
| 187 | 476,25 | 50 |
| 202 | 514,40 | 54 |
| 210 | 533,40 | 56 |
| 225 | 571,50 | 60 |
| 240 | 609,60 | 64 |
| 255 | 647,70 | 68 |
| 270 | 685,80 | 72 |
| 285 | 723,90 | 76 |
| 300 | 762,00 | 80 |
| 322 | 819,15 | 86 |
| 345 | 876,30 | 92 |
| 367 | 933,45 | 98 |
| 390 | 990,60 | 104 |
| 405 | 1028,70 | 108 |
| 412 | 1047,70 | 110 |
| 420 | 1066,80 | 112 |
| 450 | 1143,00 | 120 |
| 480 | 1219,20 | 128 |
| 510 | 1295,40 | 136 |
| 540 | 1371,60 | 144 |
| 600 | 1524,00 | 160 |
| 728 | 1847,90 | 194 |
| 817 | 2076,50 | 218 |

| DH<br>Pitch 5,08 mm | | |
|---|---|---|
| Type | Length | Teeth |
| 240 | 609,60 | 48 |
| 270 | 685,80 | 54 |
| 300 | 762,00 | 60 |
| 330 | 838,20 | 66 |
| 360 | 914,40 | 72 |
| 390 | 990,60 | 78 |
| 420 | 1066,80 | 84 |
| 450 | 1143,00 | 90 |
| 480 | 1219,20 | 96 |
| 510 | 1295,40 | 102 |
| 540 | 1371,60 | 108 |
| 570 | 1447,80 | 114 |
| 600 | 1524,00 | 120 |
| 630 | 1600,20 | 126 |
| 660 | 1676,40 | 132 |
| 670 | 1701,80 | 134 |
| 700 | 1778,00 | 140 |
| 725 | 1841,50 | 145 |
| 750 | 1905,00 | 150 |
| 800 | 2032,00 | 160 |
| 850 | 2159,00 | 170 |
| 900 | 2286,00 | 180 |
| 1000 | 2540,00 | 200 |
| 1100 | 2794,00 | 220 |
| 1120 | 2844,80 | 224 |
| 1140 | 2895,60 | 228 |
| 1150 | 2921,00 | 230 |
| 1250 | 3175,00 | 250 |
| 1400 | 3556,00 | 280 |
| 1645 | 4178,30 | 329 |
| 1700 | 4318,00 | 340 |

**Standard widths**

| | | |
|---|---|---|
| 1" | ~ 25,40 mm | Code-No. 100 |
| 1 1/2" | ~ 38,10 mm | Code-No. 150 |
| 2" | ~ 50,80 mm | Code-No. 200 |
| 3" | ~ 76,20 mm | Code-No. 300 |
| 4" | ~ 101,6 mm | Code-No. 400 |
| 5" | ~ 127,0 mm | Code-No. 500 |

Length in mm
Other width available
Max. belt width ~ 203/305 mm.

| 3M Pitch 3 mm | | |
|---|---|---|
| Type | Length | Teeth |
| 111 | 111,00 | 37 |
| 117 | 117,00 | 39 |
| 120 | 120,00 | 40 |
| 123 | 123,00 | 41 |
| 126 | 126,00 | 42 |
| 129 | 129,00 | 43 |
| 141 | 141,00 | 47 |
| 144 | 144,00 | 48 |
| 150 | 150,00 | 50 |
| 156 | 156,00 | 52 |
| 159 | 159,00 | 53 |
| 165 | 165,00 | 55 |
| 168 | 168,00 | 56 |
| 171 | 171,00 | 57 |
| 174 | 174,00 | 58 |
| 177 | 177,00 | 59 |
| 180 | 180,00 | 60 |
| 183 | 183,00 | 61 |
| 186 | 186,00 | 62 |
| 192 | 192,00 | 64 |
| 195 | 195,00 | 65 |
| 201 | 201,00 | 67 |
| 204 | 204,00 | 68 |
| 207 | 207,00 | 69 |
| 210 | 210,00 | 70 |
| 213 | 213,00 | 71 |
| 216 | 216,00 | 72 |
| 225 | 225,00 | 75 |
| 237 | 237,00 | 79 |
| 240 | 240,00 | 80 |
| 243 | 243,00 | 81 |
| 246 | 246,00 | 82 |
| 249 | 249,00 | 83 |
| 252 | 252,00 | 84 |
| 255 | 255,00 | 85 |
| 267 | 267,00 | 89 |
| 276 | 276,00 | 92 |
| 282 | 282,00 | 94 |
| 285 | 285,00 | 95 |

| 3M Pitch 3 mm | | |
|---|---|---|
| Type | Length | Teeth |
| 288 | 288,00 | 96 |
| 291 | 291,00 | 97 |
| 294 | 294,00 | 98 |
| 300 | 300,00 | 100 |
| 306 | 306,00 | 102 |
| 312 | 312,00 | 104 |
| 315 | 315,00 | 105 |
| 318 | 318,00 | 106 |
| 330 | 330,00 | 110 |
| 333 | 333,00 | 111 |
| 336 | 336,00 | 112 |
| 339 | 339,00 | 113 |
| 345 | 345,00 | 115 |
| 357 | 357,00 | 119 |
| 363 | 363,00 | 121 |
| 366 | 366,00 | 122 |
| 384 | 384,00 | 128 |
| 390 | 390,00 | 130 |
| 411 | 411,00 | 137 |
| 420 | 420,00 | 140 |
| 426 | 426,00 | 142 |
| 435 | 435,00 | 145 |
| 447 | 447,00 | 149 |
| 462 | 462,00 | 154 |
| 474 | 474,00 | 158 |
| 477 | 477,00 | 159 |
| 480 | 480,00 | 160 |
| 486 | 486,00 | 162 |
| 489 | 489,00 | 163 |
| 495 | 495,00 | 165 |
| 501 | 501,00 | 167 |
| 513 | 513,00 | 171 |
| 519 | 519,00 | 173 |
| 522 | 522,00 | 174 |
| 525 | 525,00 | 175 |
| 531 | 531,00 | 177 |
| 537 | 537,00 | 179 |
| 558 | 558,00 | 186 |
| 564 | 564,00 | 188 |

| 3M Pitch 3 mm | | |
|---|---|---|
| Type | Length | Teeth |
| 570 | 570,00 | 190 |
| 582 | 582,00 | 194 |
| 591 | 591,00 | 197 |
| 594 | 594,00 | 198 |
| 597 | 597,00 | 199 |
| 600 | 600,00 | 200 |
| 606 | 606,00 | 202 |
| 612 | 612,00 | 204 |
| 615 | 615,00 | 205 |
| 633 | 633,00 | 211 |
| 648 | 648,00 | 216 |
| 669 | 669,00 | 223 |
| 672 | 672,00 | 224 |
| 675 | 675,00 | 225 |
| 708 | 708,00 | 236 |
| 711 | 711,00 | 237 |
| 738 | 738,00 | 246 |
| 753 | 753,00 | 251 |
| 804 | 804,00 | 268 |
| 816 | 816,00 | 272 |
| 843 | 843,00 | 281 |
| 882 | 882,00 | 294 |
| 888 | 888,00 | 296 |
| 945 | 945,00 | 315 |
| 960 | 960,00 | 320 |
| 1041 | 1041,00 | 347 |
| 1062 | 1062,00 | 354 |
| 1068 | 1068,00 | 356 |
| 1071 | 1071,00 | 357 |
| 1125 | 1125,00 | 375 |
| 1176 | 1176,00 | 392 |
| 1245 | 1245,00 | 415 |
| 1263 | 1263,00 | 421 |
| 1500 | 1500,00 | 500 |
| 1530 | 1530,00 | 510 |
| 1569 | 1569,00 | 523 |
| 1587 | 1587,00 | 529 |
| 1692 | 1692,00 | 564 |
| 1863 | 1863,00 | 621 |

Length in mm
Max. belt width ~ 470 mm.

| 5M Pitch 5 mm | | |
|---|---|---|
| Type | Length | Teeth |
| 120 | 120,00 | 24 |
| 180 | 180,00 | 36 |
| 225 | 225,00 | 45 |
| 255 | 255,00 | 51 |
| 265 | 265,00 | 53 |
| 270 | 270,00 | 54 |
| 280 | 280,00 | 56 |
| 295 | 295,00 | 59 |
| 300 | 300,00 | 60 |
| 305 | 305,00 | 61 |
| 325 | 325,00 | 65 |
| 330 | 330,00 | 66 |
| 340 | 340,00 | 68 |
| 345 | 345,00 | 69 |
| 350 | 350,00 | 70 |
| 360 | 360,00 | 72 |
| 365 | 365,00 | 73 |
| 370 | 370,00 | 74 |
| 375 | 375,00 | 75 |
| 385 | 385,00 | 77 |
| 400 | 400,00 | 80 |
| 415 | 415,00 | 83 |
| 420 | 420,00 | 84 |
| 425 | 425,00 | 85 |
| 450 | 450,00 | 90 |
| 460 | 460,00 | 92 |
| 475 | 475,00 | 95 |
| 490 | 490,00 | 98 |
| 500 | 500,00 | 100 |
| 520 | 520,00 | 104 |
| 525 | 525,00 | 105 |
| 535 | 535,00 | 107 |
| 540 | 540,00 | 108 |
| 550 | 550,00 | 110 |
| 560 | 560,00 | 112 |
| 565 | 565,00 | 113 |
| 575 | 575,00 | 115 |
| 580 | 580,00 | 116 |
| 600 | 600,00 | 120 |
| 610 | 610,00 | 122 |
| 615 | 615,00 | 123 |
| 620 | 620,00 | 124 |
| 625 | 625,00 | 125 |
| 630 | 630,00 | 126 |
| 635 | 635,00 | 127 |
| 640 | 640,00 | 128 |
| 645 | 645,00 | 129 |
| 650 | 650,00 | 130 |
| 655 | 655,00 | 131 |
| 665 | 665,00 | 133 |
| 670 | 670,00 | 134 |

| 5M Pitch 5 mm | | |
|---|---|---|
| Type | Length | Teeth |
| 700 | 700,00 | 140 |
| 710 | 710,00 | 142 |
| 720 | 720,00 | 144 |
| 740 | 740,00 | 148 |
| 745 | 745,00 | 149 |
| 750 | 750,00 | 150 |
| 755 | 755,00 | 151 |
| 775 | 775,00 | 155 |
| 790 | 790,00 | 158 |
| 800 | 800,00 | 160 |
| 810 | 810,00 | 162 |
| 825 | 825,00 | 165 |
| 830 | 830,00 | 166 |
| 835 | 835,00 | 167 |
| 845 | 845,00 | 169 |
| 850 | 850,00 | 170 |
| 860 | 860,00 | 172 |
| 870 | 870,00 | 174 |
| 890 | 890,00 | 178 |
| 900 | 900,00 | 180 |
| 920 | 920,00 | 184 |
| 925 | 925,00 | 185 |
| 935 | 935,00 | 187 |
| 940 | 940,00 | 188 |
| 950 | 950,00 | 190 |
| 960 | 960,00 | 192 |
| 965 | 965,00 | 193 |
| 975 | 975,00 | 195 |
| 980 | 980,00 | 196 |
| 1000 | 1000,00 | 200 |
| 1025 | 1025,00 | 205 |
| 1035 | 1035,00 | 207 |
| 1050 | 1050,00 | 210 |
| 1100 | 1100,00 | 220 |
| 1125 | 1125,00 | 225 |
| 1135 | 1135,00 | 227 |
| 1200 | 1200,00 | 240 |
| 1270 | 1270,00 | 254 |
| 1380 | 1380,00 | 276 |
| 1400 | 1400,00 | 280 |
| 1420 | 1420,00 | 284 |
| 1425 | 1425,00 | 285 |
| 1500 | 1500,00 | 300 |
| 1595 | 1595,00 | 319 |
| 1690 | 1690,00 | 338 |
| 1790 | 1790,00 | 358 |
| 1800 | 1800,00 | 360 |
| 1870 | 1870,00 | 374 |
| 1895 | 1895,00 | 379 |
| 1910 | 1910,00 | 382 |
| 2000 | 2000,00 | 400 |
| 2110 | 2110,00 | 422 |
| 2250 | 2250,00 | 450 |
| 2350 | 2350,00 | 470 |
| 2525 | 2525,00 | 505 |

| 8M Pitch 8 mm | | |
|---|---|---|
| Type | Length | Teeth |
| 288 | 288,00 | 36 |
| 320 | 320,00 | 40 |
| 352 | 352,00 | 44 |
| 376 | 376,00 | 47 |
| 416 | 416,00 | 52 |
| 424 | 424,00 | 53 |
| 480 | 480,00 | 60 |
| 512 | 512,00 | 64 |
| 520 | 520,00 | 65 |
| 536 | 536,00 | 67 |
| 560 | 560,00 | 70 |
| 576 | 576,00 | 72 |
| 584 | 584,00 | 73 |
| 600 | 600,00 | 75 |
| 608 | 608,00 | 76 |
| 624 | 624,00 | 78 |
| 632 | 632,00 | 79 |
| 640 | 640,00 | 80 |
| 656 | 656,00 | 82 |
| 672 | 672,00 | 84 |
| 680 | 680,00 | 85 |
| 712 | 712,00 | 89 |
| 720 | 720,00 | 90 |
| 744 | 744,00 | 93 |
| 760 | 760,00 | 95 |
| 776 | 776,00 | 97 |
| 784 | 784,00 | 98 |
| 792 | 792,00 | 99 |
| 800 | 800,00 | 100 |
| 824 | 824,00 | 103 |
| 840 | 840,00 | 105 |
| 848 | 848,00 | 106 |
| 856 | 856,00 | 107 |
| 880 | 880,00 | 110 |
| 896 | 896,00 | 112 |
| 912 | 912,00 | 114 |
| 920 | 920,00 | 115 |
| 936 | 936,00 | 117 |
| 960 | 960,00 | 120 |
| 968 | 968,00 | 121 |
| 976 | 976,00 | 122 |
| 1000 | 1000,00 | 125 |
| 1040 | 1040,00 | 130 |
| 1056 | 1056,00 | 132 |
| 1064 | 1064,00 | 133 |
| 1080 | 1080,00 | 135 |
| 1096 | 1096,00 | 137 |
| 1120 | 1120,00 | 140 |
| 1128 | 1128,00 | 141 |
| 1152 | 1152,00 | 144 |
| 1160 | 1160,00 | 145 |
| 1168 | 1168,00 | 146 |
| 1184 | 1184,00 | 148 |
| 1192 | 1192,00 | 149 |
| 1200 | 1200,00 | 150 |
| 1216 | 1216,00 | 152 |
| 1224 | 1224,00 | 153 |
| 1248 | 1248,00 | 156 |

Length in mm
Max. belt width ~ 470 mm.

| 8M Pitch 8 mm | | |
|---|---|---|
| Type | Length | Teeth |
| 1256 | 1256 | 157 |
| 1264 | 1264 | 158 |
| 1280 | 1280 | 160 |
| 1296 | 1296 | 162 |
| 1304 | 1304 | 163 |
| 1320 | 1320 | 165 |
| 1328 | 1328 | 166 |
| 1344 | 1344 | 168 |
| 1360 | 1360 | 170 |
| 1392 | 1392 | 174 |
| 1400 | 1400 | 175 |
| 1424 | 1424 | 178 |
| 1432 | 1432 | 179 |
| 1440 | 1440 | 180 |
| 1480 | 1480 | 185 |
| 1520 | 1520 | 190 |
| 1552 | 1552 | 194 |
| 1584 | 1584 | 198 |
| 1600 | 1600 | 200 |
| 1680 | 1680 | 210 |
| 1696 | 1696 | 212 |
| 1728 | 1728 | 216 |
| 1760 | 1760 | 220 |
| 1800 | 1800 | 225 |
| 1896 | 1896 | 237 |
| 1904 | 1904 | 238 |
| 1936 | 1936 | 242 |
| 2000 | 2000 | 250 |
| 2080 | 2080 | 260 |
| 2104 | 2104 | 263 |
| 2240 | 2240 | 280 |
| 2248 | 2248 | 281 |
| 2272 | 2272 | 284 |
| 2400 | 2400 | 300 |
| 2504 | 2504 | 313 |
| 2600 | 2600 | 325 |
| 2800 | 2800 | 350 |
| 3048 | 3048 | 381 |
| 3280 | 3280 | 410 |
| 3600 | 3600 | 450 |
| 4400 | 4400 | 550 |

| 14M Pitch 14 mm | | |
|---|---|---|
| Type | Length | Teeth |
| 966 | 966 | 69 |
| 1092 | 1092 | 78 |
| 1190 | 1190 | 85 |
| 1344 | 1344 | 96 |
| 1400 | 1400 | 100 |
| 1456 | 1456 | 104 |
| 1512 | 1512 | 108 |
| 1540 | 1540 | 110 |
| 1610 | 1610 | 115 |
| 1680 | 1680 | 120 |
| 1778 | 1778 | 127 |
| 1890 | 1890 | 135 |
| 2100 | 2100 | 150 |
| 2310 | 2310 | 165 |
| 2450 | 2450 | 175 |
| 2590 | 2590 | 185 |
| 2800 | 2800 | 200 |
| 3150 | 3150 | 225 |
| 3360 | 3360 | 240 |
| 3500 | 3500 | 250 |
| 3850 | 3850 | 275 |
| 4004 | 4004 | 286 |
| 4326 | 4326 | 309 |
| 4578 | 4578 | 327 |

| 20M Pitch 20 mm | | |
|---|---|---|
| Type | Length | Teeth |
| 2000* | 2000 | 100 |
| 2500* | 2500 | 125 |
| 3400* | 3400 | 170 |
| 3800* | 3800 | 190 |
| 4200* | 4200 | 210 |
| 4600* | 4600 | 230 |
| 5000* | 5000 | 250 |
| 5200* | 5200 | 260 |
| 5400* | 5400 | 270 |
| 5600* | 5600 | 280 |
| 5800* | 5800 | 290 |
| 6000* | 6000 | 300 |
| 6200* | 6200 | 310 |
| 6400* | 6400 | 320 |
| 6600* | 6600 | 330 |

* on request

Length in mm
Max. belt width ~ 470 mm.

| D5M Pitch 5 mm | | |
|---|---|---|
| Type | Length | Teeth |
| 565 | 565 | 113 |
| 600 | 600 | 120 |
| 610 | 610 | 122 |
| 615 | 615 | 123 |
| 630 | 630 | 126 |
| 635 | 635 | 127 |
| 640 | 640 | 128 |
| 665 | 665 | 133 |
| 670 | 670 | 134 |
| 675 | 675 | 135 |
| 700 | 700 | 140 |
| 705 | 705 | 141 |
| 710 | 710 | 142 |
| 725 | 725 | 145 |
| 740 | 740 | 148 |
| 755 | 755 | 151 |
| 800 | 800 | 160 |
| 835 | 835 | 167 |
| 850 | 850 | 170 |
| 890 | 890 | 178 |
| 900 | 900 | 180 |
| 935 | 935 | 187 |
| 940 | 940 | 188 |
| 950 | 950 | 190 |
| 980 | 980 | 196 |
| 1000 | 1000 | 200 |
| 1025 | 1025 | 205 |
| 1050 | 1050 | 210 |
| 1100 | 1100 | 220 |
| 1125 | 1125 | 225 |
| 1135 | 1135 | 227 |
| 1195 | 1195 | 239 |
| 1200 | 1200 | 240 |
| 1240 | 1240 | 248 |
| 1270 | 1270 | 254 |
| 1420 | 1420 | 284 |
| 1500 | 1500 | 300 |
| 1595 | 1595 | 319 |
| 1605 | 1605 | 321 |
| 1690 | 1690 | 338 |
| 1790 | 1790 | 358 |
| 1800 | 1800 | 360 |
| 1870 | 1870 | 374 |
| 1895 | 1895 | 379 |
| 1945 | 1945 | 389 |
| 2000 | 2000 | 400 |
| 2250 | 2250 | 450 |
| 2525 | 2525 | 505 |

| D8M Pitch 8 mm | | |
|---|---|---|
| Type | Length | Teeth |
| 600 | 600 | 75 |
| 608 | 608 | 76 |
| 632 | 632 | 79 |
| 640 | 640 | 80 |
| 656 | 656 | 82 |
| 680 | 680 | 85 |
| 720 | 720 | 90 |
| 776 | 776 | 97 |
| 784 | 784 | 98 |
| 800 | 800 | 100 |
| 840 | 840 | 105 |
| 880 | 880 | 110 |
| 896 | 896 | 112 |
| 920 | 920 | 115 |
| 960 | 960 | 120 |
| 1000 | 1000 | 125 |
| 1040 | 1040 | 130 |
| 1080 | 1080 | 135 |
| 1120 | 1120 | 140 |
| 1128 | 1128 | 141 |
| 1160 | 1160 | 145 |
| 1184 | 1184 | 148 |
| 1200 | 1200 | 150 |
| 1224 | 1224 | 153 |
| 1248 | 1248 | 156 |
| 1256 | 1256 | 157 |
| 1264 | 1264 | 158 |
| 1280 | 1280 | 160 |
| 1304 | 1304 | 163 |
| 1328 | 1328 | 166 |
| 1344 | 1344 | 168 |
| 1352 | 1353 | 169 |
| 1360 | 1360 | 170 |
| 1400 | 1400 | 175 |
| 1424 | 1424 | 178 |
| 1440 | 1440 | 180 |
| 1464 | 1464 | 183 |
| 1520 | 1520 | 190 |
| 1552 | 1552 | 194 |
| 1584 | 1584 | 198 |
| 1600 | 1600 | 200 |
| 1680 | 1680 | 210 |
| 1696 | 1696 | 212 |
| 1728 | 1728 | 216 |
| 1760 | 1760 | 220 |
| 1792 | 1792 | 224 |
| 1800 | 1800 | 225 |
| 1904 | 1904 | 238 |
| 1936 | 1936 | 242 |
| 2000 | 2000 | 250 |
| 2080 | 2080 | 260 |
| 2104 | 2104 | 263 |
| 2200 | 2200 | 275 |
| 2240 | 2240 | 280 |
| 2272 | 2272 | 284 |
| 2400 | 2400 | 300 |
| 2504 | 2504 | 313 |
| 2520 | 2520 | 315 |
| 2600 | 2600 | 325 |
| 2800 | 2800 | 350 |
| 2840 | 2840 | 355 |
| 3048 | 3048 | 381 |
| 3200 | 3200 | 400 |
| 3280 | 3280 | 410 |
| 3600 | 3600 | 450 |
| 4000 | 4000 | 500 |
| 4400 | 4400 | 550 |

| D14M Pitch 14 mm | | |
|---|---|---|
| Type | Length | Teeth |
| 966 | 966 | 69 |
| 994 | 994 | 71 |
| 1092 | 1092 | 78 |
| 1106 | 1106 | 79 |
| 1120 | 1120 | 80 |
| 1190 | 1190 | 85 |
| 1260 | 1260 | 90 |
| 1288 | 1288 | 92 |
| 1344 | 1344 | 96 |
| 1400 | 1400 | 100 |
| 1442 | 1442 | 103 |
| 1568 | 1568 | 112 |
| 1610 | 1610 | 115 |
| 1750 | 1750 | 125 |
| 1764 | 1764 | 126 |
| 1778 | 1778 | 127 |
| 1848 | 1848 | 132 |
| 1890 | 1890 | 135 |
| 1904 | 1904 | 136 |
| 1960 | 1960 | 140 |
| 2100 | 2100 | 150 |
| 2240 | 2240 | 160 |
| 2310 | 2310 | 165 |
| 2380 | 2380 | 170 |
| 2450 | 2450 | 175 |
| 2520 | 2520 | 180 |
| 2590 | 2590 | 185 |
| 2660 | 2660 | 190 |
| 2800 | 2800 | 200 |
| 2968 | 2968 | 212 |
| 3136 | 3136 | 224 |
| 3150 | 3150 | 225 |
| 3304 | 3304 | 236 |
| 3360 | 3360 | 240 |
| 3500 | 3500 | 250 |
| 3850 | 3850 | 275 |
| 3920 | 3920 | 280 |
| 4326 | 4326 | 309 |
| 4410 | 4410 | 315 |
| 4578 | 4578 | 327 |
| 4956 | 4956 | 354 |

Length in mm
Max. belt width ~ 150 / 250 mm.

| S3M Pitch 3 mm | | |
|---|---|---|
| Type | Length | Teeth |
| 120* | 120 | 40 |
| 150* | 150 | 50 |
| 177* | 177 | 59 |
| 201* | 201 | 67 |
| 225* | 225 | 75 |
| 252* | 252 | 84 |
| 264* | 264 | 88 |
| 276* | 276 | 92 |
| 300* | 300 | 100 |
| 339* | 339 | 113 |
| 384* | 384 | 128 |
| 420* | 420 | 140 |
| 459* | 459 | 153 |
| 486* | 486 | 162 |
| 501* | 501 | 167 |
| 537* | 537 | 179 |
| 564* | 564 | 188 |
| 633* | 633 | 211 |

* on request

** Type S2M on request
** Type S4,5M on request

| S5M Pitch 5 mm | | |
|---|---|---|
| Type | Length | Teeth |
| 255* | 255 | 51 |
| 295* | 295 | 59 |
| 325* | 325 | 65 |
| 350* | 350 | 70 |
| 375* | 375 | 75 |
| 390 | 390 | 78 |
| 400* | 400 | 80 |
| 425* | 425 | 85 |
| 475* | 475 | 95 |
| 490 | 490 | 98 |
| 500* | 500 | 100 |
| 520 | 520 | 104 |
| 525* | 525 | 105 |
| 560* | 560 | 112 |
| 575* | 575 | 115 |
| 600* | 600 | 120 |
| 625* | 625 | 125 |
| 650* | 650 | 130 |
| 675* | 675 | 135 |
| 700* | 700 | 140 |
| 750* | 750 | 150 |
| 800* | 800 | 160 |
| 850* | 850 | 170 |
| 900* | 900 | 180 |
| 950* | 950 | 190 |
| 1000* | 1000 | 200 |
| 1050* | 1050 | 210 |
| 1125* | 1125 | 225 |
| 1270* | 1270 | 254 |
| 1350* | 1350 | 270 |
| 1420* | 1420 | 284 |
| 1800* | 1800 | 360 |
| 2000* | 2000 | 400 |

| S8M Pitch 8 mm | | |
|---|---|---|
| Type | Length | Teeth |
| 440 | 440 | 55 |
| 480 | 480 | 60 |
| 560 | 560 | 70 |
| 600 | 600 | 75 |
| 632 | 632 | 79 |
| 640 | 640 | 80 |
| 656 | 656 | 82 |
| 680 | 680 | 85 |
| 688 | 688 | 86 |
| 696 | 696 | 87 |
| 712 | 712 | 89 |
| 720 | 720 | 90 |
| 728 | 728 | 91 |
| 736 | 736 | 92 |
| 760 | 760 | 95 |
| 768 | 768 | 96 |
| 784 | 784 | 98 |
| 792 | 792 | 99 |
| 800 | 800 | 100 |
| 824 | 824 | 103 |
| 848 | 848 | 106 |
| 864 | 864 | 108 |
| 880 | 880 | 110 |
| 896 | 896 | 112 |
| 912 | 912 | 114 |
| 920 | 920 | 115 |
| 944 | 944 | 118 |
| 960 | 960 | 120 |
| 992 | 992 | 124 |
| 1000 | 1000 | 125 |
| 1024 | 1024 | 128 |
| 1032 | 1032 | 129 |
| 1040 | 1040 | 130 |
| 1056 | 1056 | 132 |
| 1064 | 1064 | 133 |
| 1072 | 1072 | 134 |
| 1120 | 1120 | 140 |
| 1136 | 1136 | 142 |

Length in mm
Max. belt width ~ 470 mm





Timing Belt Neoprene STD

Double Timing Belt DSTD

| S8M Pitch 8 mm | | |
|---|---|---|
| Type | Length | Teeth |
| 1152 | 1152 | 144 |
| 1160 | 1160 | 145 |
| 1168 | 1168 | 146 |
| 1176 | 1176 | 147 |
| 1184 | 1184 | 148 |
| 1192 | 1192 | 149 |
| 1200 | 1200 | 150 |
| 1208 | 1208 | 151 |
| 1216 | 1216 | 152 |
| 1240 | 1240 | 155 |
| 1248 | 1248 | 156 |
| 1256 | 1256 | 157 |
| 1264 | 1264 | 158 |
| 1280 | 1280 | 160 |
| 1304 | 1304 | 163 |
| 1312 | 1312 | 164 |
| 1344 | 1344 | 168 |
| 1352 | 1352 | 169 |
| 1360 | 1360 | 170 |
| 1400 | 1400 | 175 |
| 1408 | 1408 | 176 |
| 1440 | 1440 | 180 |
| 1480 | 1480 | 185 |
| 1552 | 1552 | 194 |
| 1600 | 1600 | 200 |
| 1760 | 1760 | 220 |
| 1776 | 1776 | 222 |
| 1800 | 1800 | 225 |
| 1816 | 1816 | 227 |
| 1912 | 1912 | 239 |
| 2000 | 2000 | 250 |
| 2024 | 2024 | 253 |
| 2240 | 2240 | 280 |
| 2392 | 2392 | 299 |
| 2400 | 2400 | 300 |
| 2496 | 2496 | 312 |
| 2800 | 2800 | 350 |
| 3200 | 3200 | 400 |

| S14M Pitch 14 mm | | |
|---|---|---|
| Type | Length | Teeth |
| 1400 | 1400 | 100 |
| 1540 | 1540 | 110 |
| 1610 | 1610 | 115 |
| 1890 | 1890 | 135 |
| 2002 | 2002 | 143 |
| 2100 | 2100 | 150 |
| 2240 | 2240 | 160 |
| 2310 | 2310 | 165 |
| 2450 | 2450 | 175 |
| 2590 | 2590 | 185 |
| 2800 | 2800 | 200 |
| 3150 | 3150 | 225 |
| 3500 | 3500 | 250 |
| 3850 | 3850 | 275 |
| 4004 | 4004 | 286 |
| 4508 | 4508 | 322 |
| 5012 | 5012 | 358 |

| DS8M Pitch 8 mm | | |
|---|---|---|
| Type | Length | Teeth |
| 1160 | 1160 | 145 |
| 1168 | 1168 | 146 |
| 1176 | 1176 | 147 |
| 1184 | 1184 | 148 |
| 1200 | 1200 | 150 |
| 1216 | 1216 | 152 |
| 1240 | 1240 | 155 |
| 1256 | 1256 | 157 |
| 1264 | 1264 | 158 |
| 1280 | 1280 | 160 |
| 1304 | 1304 | 163 |
| 1312 | 1312 | 164 |
| 1344 | 1344 | 168 |
| 1400 | 1400 | 175 |
| 1408 | 1408 | 176 |
| 1440 | 1440 | 180 |
| 1480 | 1480 | 185 |
| 1600 | 1600 | 200 |
| 1760 | 1760 | 220 |
| 1776 | 1776 | 222 |

Length in mm.
Max. belt width ~ 470 mm .

**Individuality and diverse applications**
In order to optimize them for specific applications and material flow requirements, timing belts can be coated with a wide variety of materials, for example:

PVC foil white

PVC foil blue

Grip

Nubs white

Nubs blue

Waffle white

Waffle blue

Cross groove

Supergrip white

Supergrip

Saw tooth

Linear groove

Linear groove black

Fish bone

Biggrip

PU foil transparent

PU foil white

PU foil light blue

Polythan

PP blue

Nubs

SP blue

SP white

PU linear groove

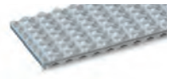
PU Grip white

PU Waffle white

PU - yellow

Celloflex

Sylomer blue

Sylomer green

Sylomer brown

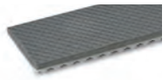
Latex foam

Foam rubber

Foam rubber

Porol with textile

Porol

Linatex

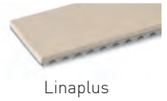
Linaplus

Linatrile

Linard

EPDM

Rubber FDA

RP 430

Elastomere

Correx

Supergrip black

Supergrip beige

Felt

Chrome leather

PES grey

Soft wool

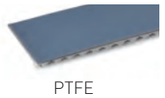
PTFE

PA textile AS black

PA textile green





**Designs and specifications**
By processing the surfaces and timing belts, e.g. by milling, punching and grinding, additional special and customized properties can be obtained.

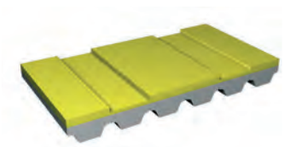
Transverse

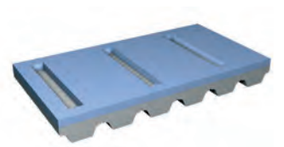
Groove

Longitudinal

Teeth

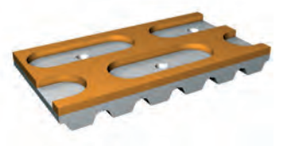
Recess

Holes

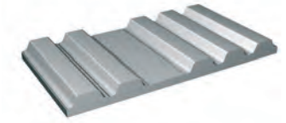
Remove single teeth

Grind edges and surfaces

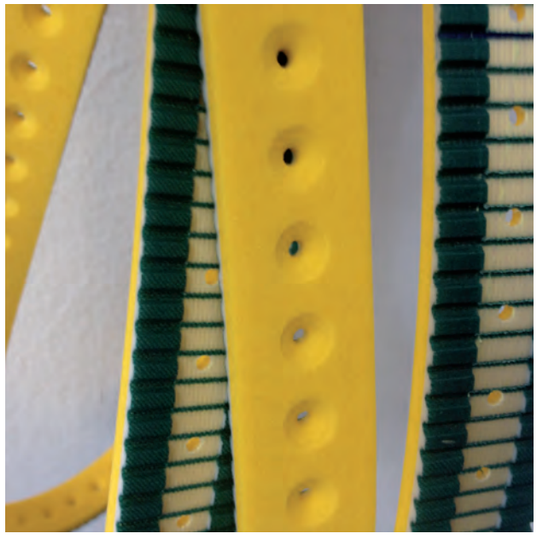

| Material | Thick-ness in mm (approx.) | Shore A kg/m³ | Color | Abrasion resistance | Max. Temp. in °C | Thick-ness factor min. | Resistance to simple oils/grease | FDA | Examples / fields of application |
|---|---|---|---|---|---|---|---|---|---|
| PVC coatings | | | | | | | | | |
| PVC transparent | 1/2/3/4 | 80 | Transpa-rent | Medium | 60 | 30 | No | No | Packaging, transport of sensitive parts |
| PVC white FDA | 1/2 | 75 | White | Medium/ low | 60 | 30 | Plant | Yes | Packaging, transport of sensitive parts |
| PVC blue (petrol) | 1/2 | 60 | Blue | Medium/ low | 60 | 25 | No | No | Packaging, transport of sensitive parts |
| Supergrip petrol | 4,5 | 45 | Petrol | Medium/ low | 60 | 40 mm | No | No | Packaging, transport, wetness, wood, paper |
| Supergrip green | 4 | 50 | Green | Medium/ low | 60 | 40 mm | No | No | Packaging, transport, wetness, wood, paper |
| Supergrip white | 3,5 | 50 | White | Medium/ low | 60 | 40 mm | Plant | Yes | Food, wood, wetness |
| Grip petrol | 1,5 | 60 | Petrol | Medium | 60 | 40 mm | No | No | Packaging, plaster board, glass |
| Nubbed white | 1,5 | 65 | White | Low | 60 | 30 mm | Plant | Yes | Food, packaging, slight dirt |
| Nubbed blue | 1,5 | 65 | Light blue | Low | 60 | 30 mm | Plant | Yes | Food, packaging, slight dirt |
| Longitudinal groove petrol | 1,5 | 60 | Petrol | Medium | 60 | 40 mm | No | No | Wet transport, high clinging, dirt |
| Waffle white | 1 | 70 | White | Medium | 60 | 40 mm | Plant | Yes | Food, pasta, packaging |
| Waffle blue | 1 | 70 | Blue | Medium | 60 | 40 mm | Plant | Yes | Food, pasta, packaging |
| Saw tooth white | 3 | 65 | White | Medium | 60 | 50 mm | Plant | Yes | Food, packaging, wood |
| Fishbone white | 3,5 | 70 | White | Medium | 60 | 70 mm | Plant | Yes | Food, wood, wetness, frozen goods |
| Big grip blue | 5,5 | 60 | Blue | Medium | 60 | 50 mm | No | No | Metal, wood, stones, wetness |
| PU coatings | | | | | | | | | |
| PU transparent 80 | 1/2/3/4 | 85 | Transpa-rent | High | 80 | 30 | Yes | No | Glass, wood, sheet metal, plastic, stone |
| PU transparent 60 | 2 | 60 | Transpa-rent | High | 80 | 30 | Yes | Yes | Food, packaging, glass |
| PU white FDA | 1/2 | 90 | White | High | 70 | 50 | Yes | Yes | Food, packaging |
| PU blue FDA | 1/2 | 85 | Light blue | High | 70 | 30 | Yes | Yes | Food, packaging |
| Vulkollan D15 | 1-15 | 70/82 | Transp.-yellow | Very high | 80 | 30/50 | Yes | No | Accumulation mode, glass, wood, metal, plastic |
| Polythane D44 | 1-15 | 72 | Brown | High | 60 | 30 | Yes | No | Accumulation mode, glass, wood, metal, plastic |
| PP blue FDA | 3 | 85 | Blue | High | 70 | 80 mm | Yes | Yes | Food, meat, sausage processing |
| SP blue FDA | 3 | 85 | Blue | High | 70 | 50 mm | Yes | Yes | Food, meat, sausage processing |
| SP white FDA | 3 | 85 | White | High | 70 | 50 mm | Yes | Yes | Food, meat, sausage processing |
| PU Longitudinal groove transp. | 2 | 80 | Transpa-rent | High | 70 | 50 mm | Yes | No | Oily, moist metals, glass, bricks |
| PU Nubbed transparent | 3 | 80 | Transpa-rent | High | 70 | 70 mm | Yes | No | Oily, moist metals, glass, bricks |
| PU Waffle white | 3 | 80 | White | High | 70 | 90 mm | Yes | Yes | Wood, bricks, food |
| PU Grip white | 1,5 | 80 | White | High | 70 | 50 mm | Yes | Yes | Food, packaging |
| Celloflex | 1-10 | RG400 | Yellow-brown | Medium | 60 | 30 | Limited | No | Cardboard articles, accumulation, pcbs, textile |
| PU yellow (gray) | 2-10 | 50 | Yellow (gray) | Medium | 60 | 25 | Yes | No | Packaging, vacuum, textile, glass, wood |
| Sylomer blue | 2-25 | RG220 | Blue | Low | 60 | 20 | Limited | No | Guiding, centering, pressing on, labels |
| Sylomer green | 2-25 | RG300 | Green | Low | 60 | 25 | Limited | No | Guiding, centering, pressing on, labels |
| Sylomer brown | 2-25 | RG400 | Brown | Low | 60 | 30 | Limited | No | Guiding, centering, pressing on |
| Sylomer yellow | 2-25 | RG150 | Yellow | Low | 60 | 15 | Limited | No | Guiding, centering, pressing on |

| Material | Thickness in mm (approx.) | Shore A kg/m³ | Color | Abrasion resistance | Max. Temp. in °C | Thick-ness factor min. | Resistance to simple oils/grease | FDA | Examples / fields of application |
|---|---|---|---|---|---|---|---|---|---|
| Elastomer coatings | | | | | | | | | |
| Linatex | 1,5/2,4/3,2/4,8/6,4/7,9/9,6 | 40 | Red | Medium/ high | 70 | 25 | No | No | High adhesive, sensitive parts |
| Linaplus | 2,4/3/6 | 40 | White | Medium/ high | 70 | 25 | Plant | Yes | High adhesive, sensitive parts |
| Linard | 3/5 | 60 | Red | Medium/ high | 70 | 30 | No | No | High adhesive, sensitive parts |
| Linatril | 3/5/6/8 | 50 | Orange | Medium/ high | 100 | 25 | Yes | No | Taking down textile, waxy substances |
| FDA rubber light | 1,5/2/5/10 | 70 | White/ beige | Medium | 60 | 35 | Limited | Yes | Food, transport |
| EPDM Heat | 2/3/4/5/6/8/10 | 50 | Black | Medium | 150 | 30 | No | No | High temperatures, metal, glass |
| Viton | 2/3/4/5/6/8/10 | 75 | Black | Low | 250 | 30 | Yes | No | High temperatures, metal, glass |
| EPDM | 2/3/6 | 65 | Black | Medium | 80 | 30 | No | No | Action of light and ozone |
| Elastomer light green | 1 | 60 | Light Green | Medium | 100 | 25 | Limited | No | High adhesive, sensitive parts |
| Elastomer green | 2 | 70 | Green | Medium | 100 | 25 | Yes | No | High adhesive, sensitive parts |
| Correx | 4/6/8/10 | 35 | Beige | Medium | 60 | 30 | No | No | Sheet metal, pipes, cardboard articles |
| RP430 | 2/3/4/5/6 | 50 | Yellow | Medium | 60 | 20 | No | No | Glass, steel |
| Supergrip rubber | 3,5 | 60 | Black | Medium | 60 | 40 mm | Limited | No | Cardboard articles, sensitive parts |
| Supergrip rubber | 3,5 | 60 | Beige | Medium | 60 | 40 mm | Yes | No | Cardboard articles, sensitive parts, oily sheet metal |
| Porol NE | 1/2/3/4/5/6/7/8/10 | RG220 | Black | Low | 60 | 20 | No | No | Press-on belts, labels, paper, cardboard |
| Foam rubber | 1/2/3/4/5/6/7/8/10 | RG350 | Black | Low | 60 | 20 | No | No | Press-on belts, labels, cardboard articles |
| Latex foam | 3 | 35 | Gray | Low | 100 | 30 | Yes | No | Press-on belts, labels, cardboard articles |
| Sponge rubber | 5/10/12/15/20 | RG150-350 | Orange | Low | 60 | 15-25 | No | No | Porcelain, soaps |
| Other coatings | | | | | | | | | |
| PA fabric | 0,3/0,55 | | Green | Medium/ high | 60 | 40 mm | No | No | Accumulation operation |
| PA fabric antistatic | 0,65 | | Dark gray | Medium/ high | 60 | 40 mm | No | No | Accumulation operation, antistatic |
| Teflon/PTFE | 0,25 | | Brown | Low | 60 | 60 mm | Limited | Yes | Adhesive repellent |
| Felt | 1-3 | 50 | White | Medium | 60 | 80 mm | Limited | No | Baked goods |
| PES beige | 1,2-2,5 | 70 | Beige | Medium | 60 | 50 mm | No | No | Transporting sensitive parts |
| PES gray | 2 | 70 | Gray | Medium | 60 | 50 mm | No | No | Transporting sensitive parts |
| Plush wool | 3 | | Green | Low | 100 | 30 | No | No | Transporting sensitive parts |
| Chrome leather | 2/3 | 65 | Gray | High | 70 | 30 mm | Yes | No | Transporting bricks/ stones, accumulation operation |
| Silicon Transparent | 1-5 | 30 | Trans-parent | Low | 120 | 20 mm | No | Yes | Adhesive repellent, non-adhesive, vacuum |
| Silicon Blue | 1-5 | 40 | Blue | Low | 120 | 20 mm | No | Yes | Adhesive repellent, non-adhesive, vacuum |

## Profiles / Cleats

Many special, innovative tasks in the flow of material, such as clocking, separating or positioning, can be solved by mounting profiles and/or cleats as well as pushing elements. Profiles and pushing features, made of high-quality polyurethane (just like our timing belts), are processed as sheet ware or injection molded to obtain the required shape. The products are available in various mixtures and grades of hardness, with glass-fiber reinforcement and in matching colors. The profiles and/or cleats are homogeneously welded onto or glued to the timing belt. Given our production methods, the shape of the cleat can be designed freely.

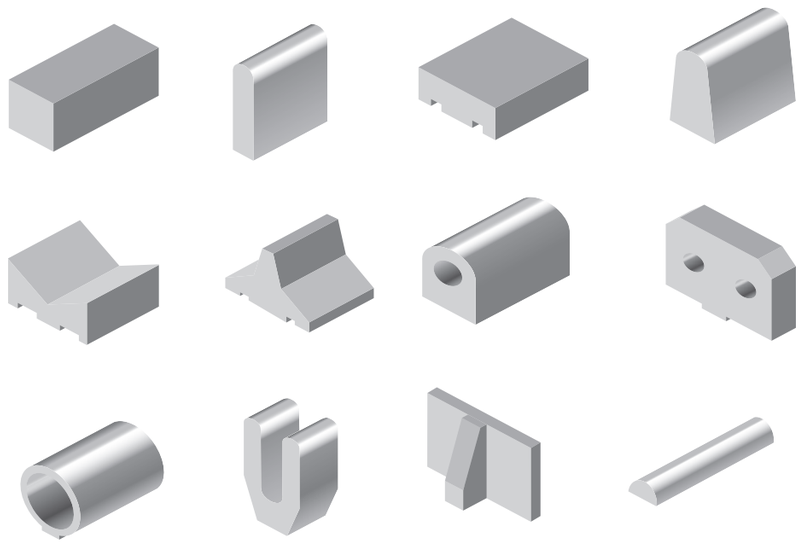

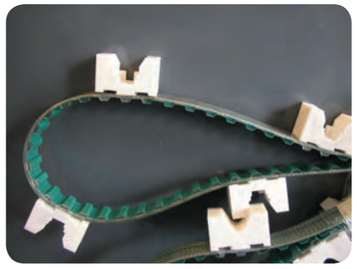

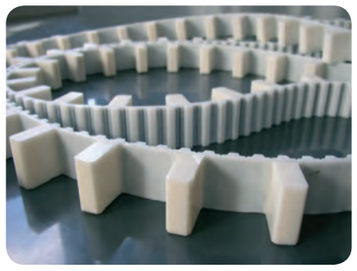

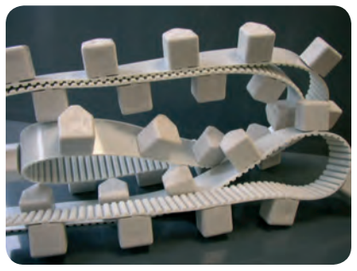

## Welding on cleats

The flexibility of the timing belt is affected when cleats are welded onto it. As a rule, the cleat thickness should be as low as possible. If possible, the cleats should be welded onto the belt opposite the tooth. The distance between the cleats is optimal when a multiple of the belt pitch is selected. The table below shows the recommended maximum cleat thickness (in mm) in relation to the selected number of pulley teeth. The positioning accuracy is +/-0.3mm for the center distance between cleats.

**Maximum cleat thickness in mm when cleats are welded onto belt opposite the tooth.**

| Type / no. of teeth | 20 | 25 | 30 | 40 | 50 | 60 | 100 |
|---|---|---|---|---|---|---|---|
| T5 | 5 | 6 | 6 | 8 | 10 | 11 | 13 |
| T10 | 8 | 9 | 10 | 12 | 14 | 15 | 20 |
| T20 | 12 | 13 | 16 | 18 | 20 | 23 | 30 |
| AT3 | 4 | 5 | 6 | 8 | 9 | 10 | 12 |
| AT5 | 5 | 6 | 6 | 8 | 10 | 11 | 13 |
| AT10 | 8 | 10 | 10 | 12 | 14 | 15 | 20 |
| AT20 | 12 | 13 | 15 | 18 | 20 | 23 | 30 |
| XL | 5 | 6 | 6 | 8 | 10 | 11 | 13 |
| L | 6 | 7 | 8 | 10 | 12 | 13 | 16 |
| H | 8 | 10 | 10 | 12 | 14 | 15 | 20 |
| XH | 13 | 14 | 15 | 18 | 20 | 23 | 30 |
| HTD5 | 5 | 5 | 6 | 8 | 10 | 11 | 13 |
| HTD8 | 6 | 8 | 9 | 10 | 12 | 14 | 15 |
| HTD14 | - | 10 | 12 | 13 | 15 | 18 | 20 |

**Maximum cleat thickness in mm when cleats are welded onto belt opposite the tooth space.**

| Type / no. of teeth | 20 | 25 | 30 | 40 | 50 | 60 | 100 |
|---|---|---|---|---|---|---|---|
| T5 | 2 | 2 | 3 | 4 | 6 | 8 | 10 |
| T10 | 3 | 4 | 4 | 6 | 9 | 12 | 20 |
| T20 | 5 | 5 | 6 | 8 | 12 | 20 | 30 |
| AT3 | - | 2 | 2 | 3 | 4 | 6 | 8 |
| AT5 | 2 | 2 | 3 | 4 | 6 | 8 | 10 |
| AT10 | 3 | 4 | 4 | 6 | 9 | 12 | 20 |
| AT20 | 5 | 5 | 6 | 8 | 12 | 20 | 30 |
| XL | 2 | 2 | 3 | 4 | 6 | 8 | 10 |
| L | 3 | 3 | 4 | 5 | 7 | 10 | 16 |
| H | 4 | 5 | 6 | 7 | 10 | 12 | 20 |
| XH | 5 | 5 | 6 | 8 | 12 | 20 | 30 |
| HTD5 | 2 | 2 | 3 | 4 | 6 | 8 | 10 |
| HTD8 | 3 | 3 | 4 | 5 | 6 | 9 | 12 |
| HTD14 | - | 5 | 6 | 6 | 7 | 10 | 13 |

**All measurements and tolerances are based on experience and provided without guarantee.**

## Synchronising pulleys easy drive® T-profile

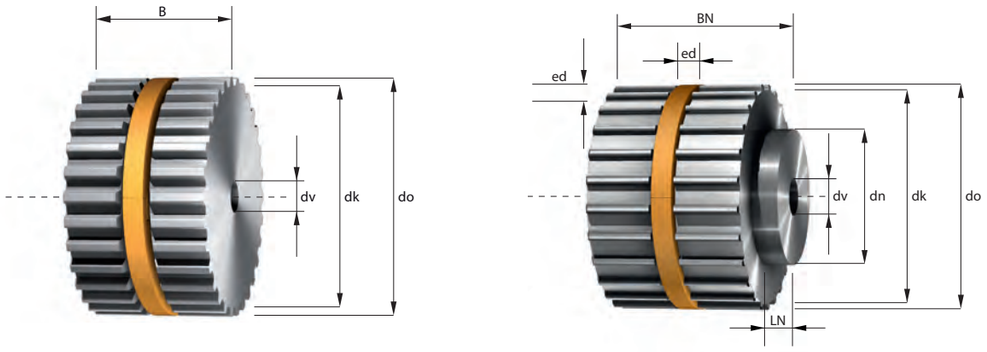


z = Number of teeth
dk = Outside diameter
do = Pitch diameter
ed = easy drive® groove
dv = Diameter of pre-bore
dmax = max. bore diameter without feather key groove
dh = Hub diameter
wh = Hub width

Groove base to max. bore diameter min. 3-4 mm wall thickness
Materials: Stock pulleys - aluminium; special pulleys - steel, gray cast iron, plastics
Stock rings easy drive® - plastic; special rings - aluminium and steel

| | | | | | | | | | |
|---|---|---|---|---|---|---|---|---|---|
| T 2,5 | Belt width | = b (mm) | 16 | 20 | 25 | 32 | 50 | | |
| | Total width | = B (mm) | 18 | 22 | 27 | 34 | 52 | | |
| | Total width with hub | = BN (mm) | 24 | 28 | 33 | 40 | 58 | | |

Starting from z = 27
Min. diameter of the tension rollers without contra-flexure 15 mm, with contra-flexure 18 mm.

| | | | | | | | | | |
|---|---|---|---|---|---|---|---|---|---|
| T 5 | Belt width | = b (mm) | 16 | 20 | 25 | 32 | 50 | 75 | 100 | 150 |
| | Total width | = B (mm) | 18 | 22 | 27 | 34 | 52 | 77 | 102 | 152 |
| | Total width with hub | = BN (mm) | 24 | 28 | 33 | 40 | 58 | 83 | 108 | 158 |

Starting from z = 14
Min. diameter of the tension rollers without contra-flexure 20 mm, with contra-flexure 30 mm.

| | | | | | | | | | |
|---|---|---|---|---|---|---|---|---|---|
| T 10 | Belt width | = b (mm) | 16 | 25 | 32 | 50 | 75 | 100 | 150 |
| | Total width | = B (mm) | 18 | 27 | 34 | 52 | 77 | 102 | 152 |
| | Total width with hub | = BN (mm) | 28 | 37 | 44 | 62 | 87 | 112 | 162 |

Starting from z = 12
Min. diameter of the tension rollers without contra-flexure 60 mm, with contra-flexure 80 mm.

| | | | | | | | | | | |
|---|---|---|---|---|---|---|---|---|---|---|
| T 20 | Belt width | = b (mm) | 16 | 25 | 32 | 50 | 75 | 100 | 125 | 150 |
| | Total width | = B (mm) | 18 | 27 | 34 | 52 | 77 | 102 | 127 | 152 |
| | Total width with hub | = BN (mm) | 28 | 37 | 44 | 62 | 87 | 112 | 137 | 162 |

Starting from z = 15
Min. diameter of the tension rollers without contra-flexure 120 mm, with contra-flexure 150 mm.





## Synchronising pulleys easy drive® AT-profile

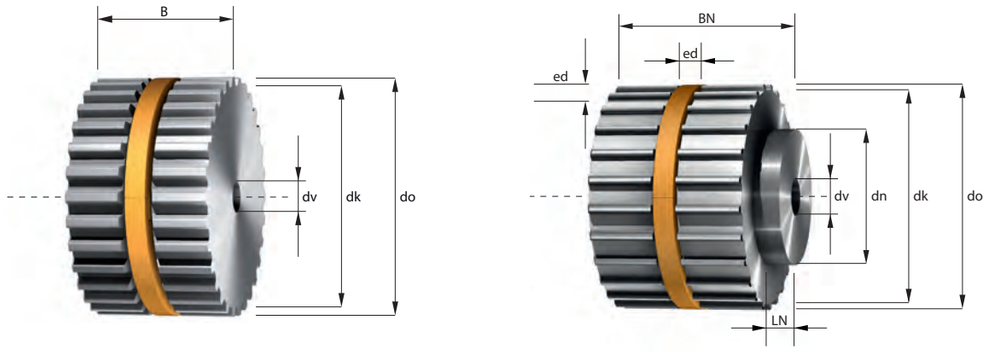


z = Number of teeth
dk = Outside diameter
do = Pitch diameter
ed = easy drive® groove
dv = Diameter of pre-bore
dmax = max. bore diameter without feather key groove
dh = Hub diameter
wh = Hub width

Groove base to max. bore diameter min. 3-4 mm wall thickness
Materials: Stock pulleys - aluminium; special pulleys - steel, gray cast iron, plastics
Stock rings easy drive® - plastic; special rings - aluminium and steel

| | | | | | | | |
|---|---|---|---|---|---|---|---|
| AT 3 | Belt width | = b (mm) | 16 | 25 | 32 | 50 | |
| | Total width | = B (mm) | 18 | 27 | 34 | 52 | |
| | Total width with hub | = BN (mm) | 24 | 33 | 40 | 58 | |

Starting from z = 22
Min. diameter of the tension rollers without contra-flexure 15 mm, with contra-flexure 20 mm.

| | | | | | | | | | |
|---|---|---|---|---|---|---|---|---|---|
| AT 5 | Belt width | = b (mm) | 16 | 20 | 25 | 32 | 50 | 75 | 100 | 150 |
| | Total width | = B (mm) | 18 | 22 | 27 | 34 | 52 | 77 | 102 | 152 |
| | Total width with hub | = BN (mm) | 24 | 28 | 33 | 40 | 58 | 83 | 108 | 158 |

Starting from z = 14
Min. diameter of the tension rollers without contra-flexure 18 mm, with contra-flexure 60 mm.

| | | | | | | | | | |
|---|---|---|---|---|---|---|---|---|---|
| AT 10 | Belt width | = b (mm) | 16 | 25 | 32 | 50 | 75 | 100 | 150 |
| | Total width | = B (mm) | 18 | 27 | 34 | 52 | 77 | 102 | 152 |
| | Total width with hub | = BN (mm) | 28 | 37 | 44 | 62 | 87 | 112 | 162 |

Starting from z = 12
Min. diameter of the tension rollers without contra-flexure 50 mm, with contra-flexure 120 mm.

| | | | | | | | | | | |
|---|---|---|---|---|---|---|---|---|---|---|
| AT 20 | Belt width | = b (mm) | 16 | 25 | 32 | 50 | 75 | 100 | 125 | 150 |
| | Total width | = B (mm) | 18 | 27 | 34 | 52 | 77 | 102 | 127 | 152 |
| | Total width with hub | = BN (mm) | 28 | 37 | 44 | 62 | 87 | 112 | 137 | 162 |

Starting from z = 18
Min. diameter of the tension rollers without contra-flexure 120mm, with contra-flexure 180 mm.

## Synchronising pulleys easy drive® HTD-profile

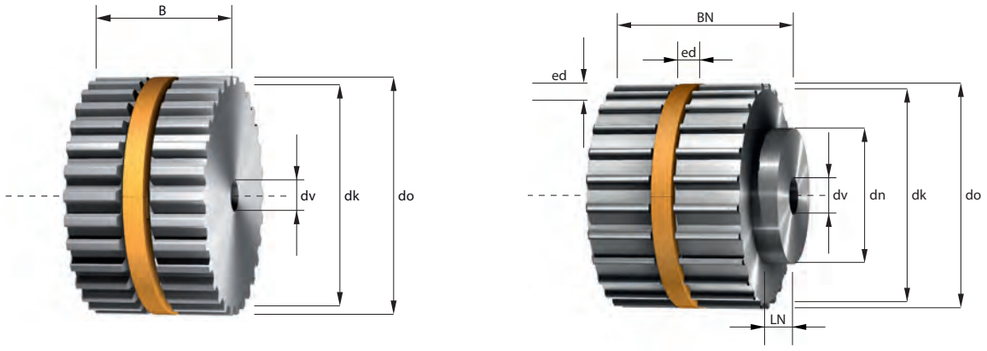


z = Number of teeth
dk = Outside diameter
do = Pitch diameter
ed = easy drive® groove
dv = Diameter of pre-bore
dmax = max. bore diameter without feather key groove
dh = Hub diameter
wh = Hub width
Groove base to max. bore diameter min. 3-4 mm wall thickness
Materials: Stock pulleys - aluminium; special pulleys - steel, gray cast iron, plastics
Stock rings easy drive® - plastic; special rings - aluminium and steel

| | | | | | | | |
|---|---|---|---|---|---|---|---|
| HTD 3 | Belt width | = b (mm) | 15 | 20 | 25 | 30 | 50 |
| | Total width | = B (mm) | 17 | 22 | 27 | 32 | 52 |
| | Total width with hub | = BN (mm) | B + 6,5/10,0 mm | | | | |

Starting from z = 23
Min. diameter of the tension rollers without contra-flexure 20 mm, with contra-flexure 20 mm.

| | | | | | | | | | |
|---|---|---|---|---|---|---|---|---|---|
| HTD 5 | Belt width | = b (mm) | 15 | 20 | 25 | 30 | 50 | 75 | 100 | 150 |
| | Total width | = B (mm) | 17 | 22 | 27 | 32 | 52 | 77 | 102 | 152 |
| | Total width with hub | = BN (mm) | B + 5,5/7,5/9,5 mm | | | | | | | |

Starting from z = 14
Min. diameter of the tension rollers without contra-flexure 30 mm, with contra-flexure 60 mm.

| | | | | | | | | | |
|---|---|---|---|---|---|---|---|---|---|
| HTD 8 | Belt width | = b (mm) | 20 | 25 | 30 | 50 | 85 | 115 | 150 |
| | Total width | = B (mm) | 22 | 27 | 32 | 52 | 87 | 117 | 152 |
| | Total width with hub | = BN (mm) | 32 | 37 | 42 | 62 | 97 | 127 | 162 |

Starting from z = 20
Min. diameter of the tension rollers without contra-flexure 60 mm, with contra-flexure 120 mm.

| | | | | | | | |
|---|---|---|---|---|---|---|---|
| HTD 14 | Belt width | = b (mm) | 40 | 55 | 85 | 115 | 170 |
| | Total width | = B (mm) | 42 | 57 | 87 | 117 | 172 |
| | Total width with hub | = BN (mm) | 57 | 72 | 102 | 132 | 187 |

Starting from z = 28
Min. diameter of the tension rollers without contra-flexure 180 mm, with contra-flexure 200 mm.





## Synchronising pulleys easy drive® Imperial-profile

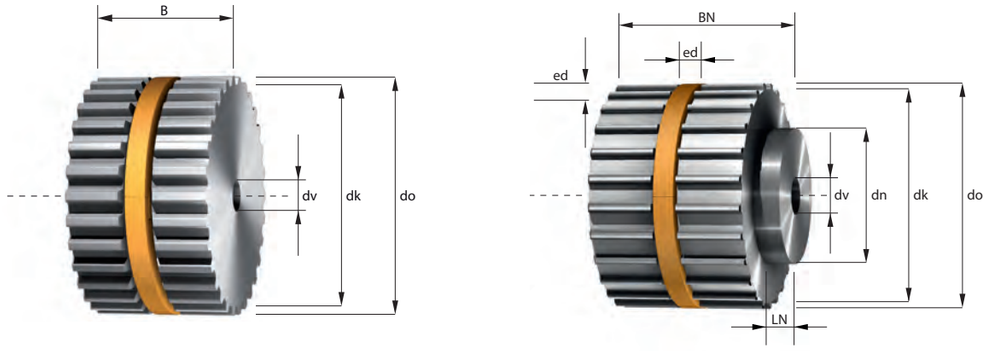


z = Number of teeth
dk = Outside diameter
do = Pitch diameter
ed = easy drive® groove
dv = Diameter of pre-bore
dmax = max. bore diameter without feather key groove
dh = Hub diameter
wh = Hub width
Groove base to max. bore diameter min. 3-4 mm wall thickness
Materials: Stock pulleys - aluminium; special pulleys - steel, gray cast iron, plastics
Stock rings easy drive® - plastic; special rings - aluminium and steel

| | | | | | | |
|---|---|---|---|---|---|---|
| MXL T 1/8" | Imperial code | | 075 | 100 | 150 | 200 |
| | Belt width | = b (mm) | 19,1 | 25,4 | 38,1 | 50,8 |
| | Total width | = B (mm) | 21,1 | 27,4 | 40,1 | 52,8 |
| | Total width with hub | = BN (mm) | 27,1 | 33,4 | 46,1 | 58,8 |

Starting from z = 34
Min. diameter of the tension rollers without contra-flexure 15 mm, with contra-flexure 18 mm.

| | | | | | | | | |
|---|---|---|---|---|---|---|---|---|
| XL T 1/5" | Imperial code | | 075 | 100 | 150 | 200 | 300 | 400 |
| | Belt width | = b (mm) | 19,1 | 25,4 | 38,1 | 50,8 | 76,2 | 101,6 |
| | Total width | = B (mm) | 21,1 | 27,4 | 40,1 | 52,8 | 78,2 | 103,6 |
| | Total width with hub | = BN (mm) | B + 5,3/8,1/12,1 mm | | | | | |

Starting from z = 14
Min. diameter of the tension rollers without contra-flexure 30 mm, with contra-flexure 30 mm.

| | | | | | | | | | |
|---|---|---|---|---|---|---|---|---|---|
| L T 3/8" | Imperial code | | 075 | 100 | 150 | 200 | 300 | 400 | 600 |
| | Belt width | = b (mm) | 19,1 | 25,4 | 38,1 | 50,8 | 76,2 | 101,6 | 152,4 |
| | Total width | = B (mm) | 21,1 | 27,4 | 40,1 | 52,8 | 78,2 | 103,6 | 154,4 |
| | Total width with hub | = BN (mm) | B + 7 / 9 mm | | | | | | |

Starting from z = 10
Min. diameter of the tension rollers without contra-flexure 60 mm, with contra-flexure 120 mm.

| | | | | | | | | | |
|---|---|---|---|---|---|---|---|---|---|
| H T 1/2" | Imperial code | | 075 | 100 | 150 | 200 | 300 | 400 | 600 |
| | Belt width | = b (mm) | 19,1 | 25,4 | 38,1 | 50,8 | 76,2 | 101,6 | 152,4 |
| | Total width | = B (mm) | 21,1 | 27,4 | 40,1 | 52,8 | 78,2 | 103,6 | 154,4 |
| | Total width with hub | = BN (mm) | B + 10 / 8 / 11 / 16 mm | | | | | | |

Starting from z = 14
Min. diameter of the tension rollers without contra-flexure 60 mm, with contra-flexure 80 mm.

## Synchronising pulleys easy drive® for cylindrical bore T-profile

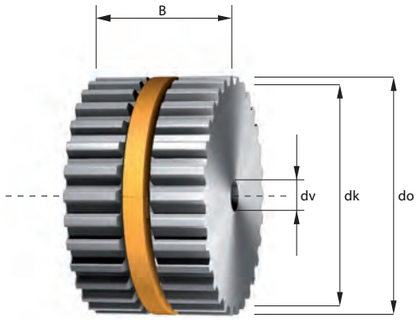


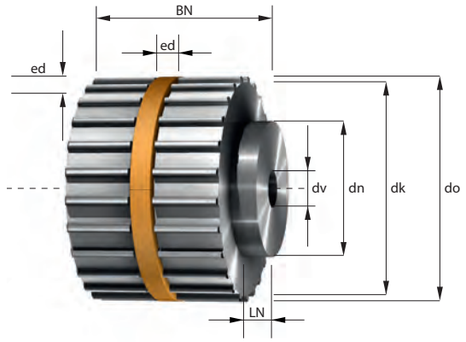


z = Number of teeth
dk = Outside diameter
do = Pitch diameter
ed = easy drive® groove
dv = Diameter of pre-bore
dmax = max. bore diameter without feather key groove
dh = Hub diameter
wh = Hub width

Min. diameter of the tension rollers without contra-flexure 15 mm, with contra-flexure 18 mm.

| Belt width | = b (mm) | 16 | 20 | 25 | 32 | 50 |
|---|---|---|---|---|---|---|
| Total width | = B (mm) | 18 | 22 | 27 | 34 | 52 |
| Total width with hub | = BN (mm) | 24 | 28 | 33 | 40 | 58 |

Other widths and larger sizes are available.

### T 2,5

| z | dk (mm) | do (mm) | ed (BxH) (mm) | dv (mm) | dmax (mm) | Hub (BxH) (mm) |
|---|---|---|---|---|---|---|
| 27 | 20,95 | 21,49 | 5,85 x 4 | - | 6 | 14 x 6 |
| 28 | 21,76 | 22,28 | 5,85 x 4 | - | 6 | 14 x 6 |
| 29 | 22,55 | 23,08 | 5,85 x 4 | 4H7 | 7 | 14 x 6 |
| 30 | 23,35 | 23,87 | 5,85 x 4 | 4H7 | 8 | 16 x 6 |
| 31 | 24,15 | 24,67 | 5,85 x 4 | 4H7 | 8 | 16 x 6 |
| 32 | 24,95 | 25,46 | 5,85 x 4 | 4H7 | 8 | 16 x 6 |
| 33 | 25,75 | 26,26 | 5,85 x 4 | 4H7 | 9 | 16 x 6 |
| 34 | 26,55 | 27,06 | 5,85 x 4 | 6H7 | 9 | 16 x 6 |
| 35 | 27,35 | 27,85 | 5,85 x 4 | 6H7 | 11 | 16 x 6 |
| 36 | 28,15 | 28,65 | 5,85 x 4 | 6H7 | 12 | 20 x 6 |
| 37 | 28,90 | 29,44 | 5,85 x 4 | 6H7 | 12 | 20 x 6 |
| 38 | 29,70 | 30,24 | 5,85 x 4 | 6H7 | 14 | 20 x 6 |
| 39 | 30,50 | 31,04 | 5,85 x 5 | 6H7 | 10 | 20 x 6 |
| 40 | 31,30 | 31,83 | 5,85 x 5 | 6H7 | 10 | 22 x 6 |
| 41 | 32,10 | 32,63 | 5,85 x 5 | 6H7 | 12 | 22 x 6 |

| z | dk (mm) | do (mm) | ed (BxH) (mm) | dv (mm) | dmax (mm) | Hub (BxH) (mm) |
|---|---|---|---|---|---|---|
| 42 | 32,90 | 33,42 | 5,85 x 5 | 6H7 | 12 | 22 x 6 |
| 43 | 33,70 | 34,22 | 5,85 x 5 | 6H7 | 13 | 22 x 6 |
| 44 | 34,50 | 35,01 | 5,85 x 5 | 6H7 | 14 | 24 x 6 |
| 45 | 35,30 | 35,81 | 5,85 x 5 | 6H7 | 15 | 22 x 6 |
| 46 | 36,10 | 36,61 | 5,85 x 5 | 6H7 | 16 | 22 x 6 |
| 47 | 36,90 | 37,40 | 5,85 x 5 | 6H7 | 16 | 22 x 6 |
| 48 | 37,70 | 38,20 | 5,85 x 5 | 6H7 | 17 | 26 x 6 |
| 49 | 38,45 | 38,99 | 5,85 x 5 | 6H7 | 18 | 26 x 6 |
| 50 | 39,25 | 39,79 | 5,85 x 5 | 6H7 | 19 | 26 x 6 |
| 51 | 40,05 | 40,58 | 5,85 x 5 | 6H7 | 20 | 26 x 6 |
| 52 | 40,85 | 41,38 | 5,85 x 5 | 6H7 | 20 | 26 x 6 |
| 53 | 41,65 | 42,18 | 5,85 x 5 | 6H7 | 21 | 26 x 6 |
| 54 | 42,45 | 42,97 | 5,85 x 5 | 6H7 | 22 | 26 x 6 |
| 55 | 43,25 | 43,77 | 5,85 x 5 | 6H7 | 23 | 26 x 6 |
| 56 | 44,05 | 44,56 | 5,85 x 5 | 6H7 | 24 | 26 x 6 |

= Standard ring sizes in stock

### T 2,5

| z | dk (mm) | do (mm) | ed (BxH) (mm) | dv (mm) | dmax (mm) | Hub (BxH) (mm) |
|---|---|---|---|---|---|---|
| 57 | 44,85 | 45,36 | 5,85 x 5 | 6H7 | 24 | 26 x 6 |
| 58 | 45,65 | 46,15 | 5,85 x 5 | 6H7 | 25 | 26 x 6 |
| 59 | 46,45 | 46,95 | 5,85 x 5 | 6H7 | 26 | 26 x 6 |
| 60 | 47,25 | 47,75 | 5,85 x 5 | 8H7 | 27 | 34 x 6 |
| 61 | 48,05 | 48,54 | 5,85 x 5 | 8H7 | 28 | 34 x 6 |
| 62 | 48,80 | 49,34 | 5,85 x 5 | 8H7 | 28 | 34 x 6 |
| 63 | 49,60 | 50,13 | 5,85 x 5 | 8H7 | 28 | 34 x 6 |
| 64 | 50,40 | 50,93 | 5,85 x 5 | 8H7 | 28 | 34 x 6 |
| 65 | 51,20 | 51,73 | 5,85 x 5 | 8H7 | 30 | 34 x 6 |
| 66 | 52,00 | 52,52 | 5,85 x 5 | 8H7 | 30 | 34 x 6 |
| 67 | 52,80 | 53,32 | 5,85 x 5 | 8H7 | 30 | 34 x 6 |
| 68 | 53,60 | 54,11 | 5,85 x 5 | 8H7 | 32 | 34 x 6 |
| 69 | 54,40 | 54,91 | 5,85 x 5 | 8H7 | 32 | 34 x 6 |
| 70 | 55,20 | 55,70 | 5,85 x 5 | 8H7 | 32 | 34 x 6 |
| 71 | 56,00 | 56,50 | 5,85 x 5 | 8H7 | 34 | 34 x 6 |
| 72 | 56,80 | 57,30 | 5,85 x 5 | 8H7 | 34 | 34 x 6 |
| 73 | 57,60 | 58,09 | 5,85 x 5 | 8H7 | 35 | 38 x 6 |
| 74 | 58,35 | 58,89 | 5,85 x 5 | 8H7 | 35 | 38 x 6 |
| 75 | 59,15 | 59,68 | 5,85 x 5 | 8H7 | 37 | 38 x 6 |
| 76 | 59,95 | 60,48 | 5,85 x 5 | 8H7 | 37 | 38 x 6 |
| 77 | 60,75 | 61,27 | 5,85 x 5 | 8H7 | 38 | 38 x 6 |
| 78 | 61,55 | 62,07 | 5,85 x 5 | 8H7 | 38 | 38 x 6 |
| 79 | 62,35 | 62,87 | 5,85 x 5 | 8H7 | 40 | 38 x 6 |
| 80 | 63,15 | 63,66 | 5,85 x 5 | 8H7 | 40 | 38 x 6 |
| 81 | 63,95 | 64,46 | 5,85 x 5 | 8H7 | 40 | 38 x 6 |
| 82 | 64,75 | 65,25 | 5,85 x 5 | 8H7 | 40 | 38 x 6 |
| 83 | 65,55 | 66,05 | 5,85 x 5 | 8H7 | 40 | 38 x 6 |
| 84 | 66,35 | 66,85 | 5,85 x 5 | 8H7 | 42 | 38 x 6 |
| 85 | 67,15 | 67,64 | 5,85 x 5 | 8H7 | 42 | 38 x 6 |
| 86 | 67,95 | 68,44 | 5,85 x 5 | 8H7 | 42 | 38 x 6 |
| 87 | 68,70 | 69,23 | 5,85 x 5 | 8H7 | 44 | 38 x 6 |
| 88 | 69,50 | 70,03 | 5,85 x 5 | 8H7 | 44 | 38 x 6 |
| 89 | 70,30 | 70,82 | 5,85 x 5 | 8H7 | 44 | 38 x 6 |
| 90 | 71,10 | 71,62 | 5,85 x 5 | 8H7 | 45 | 38 x 6 |
| 91 | 71,90 | 72,42 | 5,85 x 5 | 10H7 | 45 | 40 x 6 |
| 92 | 72,70 | 73,21 | 5,85 x 5 | 10H7 | 45 | 40 x 6 |
| 93 | 73,50 | 74,01 | 5,85 x 5 | 10H7 | 46 | 40 x 6 |
| 94 | 74,30 | 74,80 | 5,85 x 5 | 10H7 | 46 | 40 x 6 |
| 95 | 75,10 | 75,60 | 5,85 x 5 | 10H7 | 46 | 40 x 6 |
| 96 | 75,90 | 76,39 | 5,85 x 5 | 10H7 | 46 | 40 x 6 |
| 97 | 76,70 | 77,19 | 5,85 x 5 | 10H7 | 48 | 40 x 6 |
| 98 | 77,50 | 77,99 | 5,85 x 5 | 10H7 | 48 | 40 x 6 |
| 99 | 78,25 | 78,78 | 5,85 x 5 | 10H7 | 48 | 40 x 6 |
| 100 | 79,05 | 79,58 | 5,85 x 5 | 10H7 | 50 | 40 x 6 |
| 101 | 79,85 | 80,37 | 5,85 x 5 | 10H7 | 50 | 50 x 6 |

| z | dk (mm) | do (mm) | ed (BxH) (mm) | dv (mm) | dmax (mm) | Hub (BxH) (mm) |
|---|---|---|---|---|---|---|
| 102 | 80,65 | 81,17 | 5,85 x 5 | 10H7 | 50 | 50 x 6 |
| 103 | 81,45 | 81,96 | 5,85 x 5 | 10H7 | 50 | 50 x 6 |
| 104 | 82,25 | 82,76 | 5,85 x 5 | 10H7 | 52 | 50 x 6 |
| 105 | 83,05 | 83,56 | 5,85 x 5 | 10H7 | 52 | 50 x 6 |
| 106 | 83,85 | 84,35 | 5,85 x 5 | 10H7 | 54 | 50 x 6 |
| 107 | 84,65 | 85,15 | 5,85 x 5 | 10H7 | 54 | 50 x 6 |
| 108 | 85,45 | 85,94 | 5,85 x 5 | 10H7 | 55 | 50 x 6 |
| 109 | 86,25 | 86,74 | 5,85 x 5 | 10H7 | 55 | 50 x 6 |
| 110 | 87,05 | 87,54 | 5,85 x 5 | 10H7 | 56 | 50 x 6 |
| 111 | 87,85 | 88,33 | 5,85 x 5 | 10H7 | 56 | 50 x 6 |
| 112 | 88,60 | 89,13 | 5,85 x 5 | 10H7 | 58 | 50 x 6 |
| 113 | 89,40 | 89,92 | 5,85 x 5 | 10H7 | 58 | 50 x 6 |
| 114 | 90,20 | 90,72 | 5,85 x 5 | 10H7 | 60 | 50 x 6 |

## Synchronising pulleys easy drive® for cylindrical bore T-profile

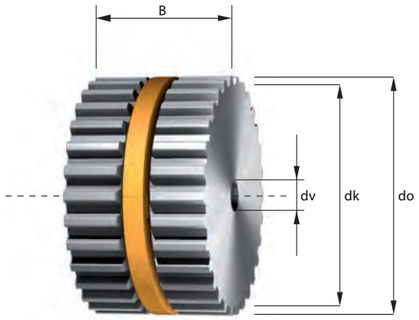


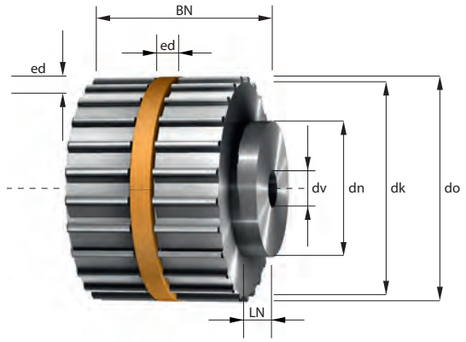


z = Number of teeth
dk = Outside diameter
do = Pitch diameter
ed = easy drive® groove
dv = Diameter of pre-bore
dmax = max. bore diameter without feather key groove
dh = Hub diameter
wh = Hub width

Min. diameter of the tension rollers without contra-flexure 20 mm, with contra-flexure 30 mm.

| Belt width | = b (mm) | 16 | 20 | 25 | 32 | 50 | 75 | 100 | 150 |
|---|---|---|---|---|---|---|---|---|---|
| Total width | = B (mm) | 18 | 22 | 27 | 34 | 52 | 77 | 102 | 152 |
| Total width with hub | = BN (mm) | 24 | 28 | 33 | 40 | 58 | 83 | 108 | 158 |

Other widths and larger sizes are available.

### T 5

| z | dk (mm) | do (mm) | ed (BxH) (mm) | dv (mm) | dmax (mm) | Hub (BxH) (mm) |
|---|---|---|---|---|---|---|
| 14 | 21,45 | 22,28 | 5,85 x 4 | 6H7 | 6 | 14 x 6 |
| 15 | 23,05 | 23,87 | 5,85 x 4 | 6H7 | 7 | 16 x 6 |
| 16 | 24,60 | 25,46 | 5,85 x 4 | 6H7 | 10 | 18 x 6 |
| 17 | 26,20 | 27,06 | 5,85 x 4 | 6H7 | 11 | 18 x 6 |
| 18 | 27,80 | 28,65 | 5,85 x 4 | 6H7 | 12 | 20 x 6 |
| 19 | 29,40 | 30,24 | 5,85 x 4 | 6H7 | 14 | 22 x 6 |
| 20 | 31,00 | 31,83 | 5,85 x 5 | 6H7 | 11 | 23 x 6 |
| 21 | 32,60 | 33,42 | 5,85 x 5 | 6H7 | 12 | 24 x 6 |
| 22 | 34,15 | 35,01 | 5,85 x 5 | 6H7 | 14 | 24 x 6 |
| 23 | 35,75 | 36,61 | 5,85 x 5 | 6H7 | 15 | 24 x 6 |
| 24 | 37,35 | 38,20 | 5,85 x 5 | 6H7 | 17 | 26 x 6 |
| 25 | 38,95 | 39,79 | 5,85 x 5 | 6H7 | 18 | 26 x 6 |
| 26 | 40,55 | 41,38 | 5,85 x 5 | 6/8H7 | 20 | 26 x 6 |
| 27 | 42,15 | 42,97 | 5,85 x 5 | 8H7 | 22 | 30 x 6 |
| 28 | 43,75 | 44,56 | 5,85 x 5 | 8H7 | 23 | 32 x 6 |

| z | dk (mm) | do (mm) | ed (BxH) (mm) | dv (mm) | dmax (mm) | Hub (BxH) (mm) |
|---|---|---|---|---|---|---|
| 29 | 45,30 | 46,15 | 5,85 x 5 | 8H7 | 25 | 30 x 6 |
| 30 | 46,90 | 47,75 | 5,85 x 5 | 8H7 | 26 | 34 x 6 |
| 31 | 48,50 | 49,34 | 5,85 x 5 | 8H7 | 28 | 34 x 6 |
| 32 | 50,10 | 50,93 | 5,85 x 5 | 8H7 | 30 | 38 x 6 |
| 33 | 51,70 | 52,52 | 5,85 x 5 | 8H7 | 31 | 38 x 6 |
| 34 | 53,30 | 54,11 | 5,85 x 5 | 8H7 | 33 | 38 x 6 |
| 35 | 54,85 | 55,70 | 5,85 x 5 | 8H7 | 34 | 38 x 6 |
| 36 | 56,45 | 57,30 | 5,85 x 5 | 8H7 | 36 | 38 x 6 |
| 37 | 58,05 | 58,89 | 5,85 x 5 | 8H7 | 38 | 38 x 6 |
| 38 | 59,65 | 60,48 | 5,85 x 5 | 8H7 | 39 | 38 x 6 |
| 39 | 61,25 | 62,07 | 5,85 x 5 | 8H7 | 40 | 38 x 6 |
| 40 | 62,85 | 63,66 | 5,85 x 5 | 8H7 | 42 | 40 x 6 |
| 41 | 64,40 | 65,25 | 5,85 x 5 | 8H7 | 44 | 40 x 6 |
| 42 | 66,00 | 66,85 | 5,85 x 5 | 8H7 | 46 | 40 x 6 |
| 43 | 67,60 | 68,44 | 5,85 x 5 | 8H7 | 47 | 40 x 6 |

= Standard ring sizes in stock
= Stock-pulleys in width 27 mm, 34 mm + 52 mm

### T 5

| z | dk (mm) | do (mm) | ed (BxH) (mm) | dv (mm) | dmax (mm) | Hub (BxH) (mm) |
|---|---|---|---|---|---|---|
| 44 | 69,20 | 70,03 | 5,85 x 5 | 8H7 | 49 | 40 x 6 |
| 45 | 70,80 | 71,62 | 5,85 x 5 | 8H7 | 51 | 40 x 6 |
| 46 | 72,40 | 73,21 | 5,85 x 5 | 8H7 | 52 | 40 x 6 |
| 47 | 73,95 | 74,80 | 5,85 x 5 | 8H7 | 54 | 40 x 6 |
| 48 | 75,55 | 76,39 | 5,85 x 5 | 8H7 | 56 | 50 x 6 |
| 49 | 77,15 | 77,99 | 5,85 x 5 | 8H7 | 57 | 50 x 6 |
| 50 | 78,75 | 79,58 | 5,85 x 5 | 8H7 | 59 | 50 x 6 |
| 51 | 80,35 | 81,17 | 5,85 x 5 | 8H7 | 60 | 50 x 6 |
| 52 | 81,95 | 82,76 | 5,85 x 5 | 8H7 | 62 | 50 x 6 |
| 53 | 83,55 | 84,35 | 5,85 x 5 | 8H7 | 64 | 50 x 6 |
| 54 | 85,10 | 85,94 | 5,85 x 5 | 8H7 | 65 | 50 x 6 |
| 55 | 86,70 | 87,54 | 5,85 x 5 | 8H7 | 67 | 50 x 6 |
| 56 | 88,30 | 89,13 | 5,85 x 5 | 8H7 | 68 | 50 x 6 |
| 57 | 89,90 | 90,72 | 5,85 x 5 | 8H7 | 70 | 50 x 6 |
| 58 | 91,50 | 92,31 | 5,85 x 5 | 8H7 | 72 | 50 x 6 |
| 59 | 93,10 | 93,90 | 5,85 x 5 | 8H7 | 73 | 50 x 6 |
| 60 | 94,65 | 95,49 | 5,85 x 5 | 8H7 | 75 | 65 x 6 |
| 61 | 96,25 | 97,08 | 5,85 x 5 | 8H7 | 76 | 65 x 6 |
| 62 | 97,85 | 98,68 | 5,85 x 5 | 8H7 | 78 | 65 x 6 |
| 63 | 99,45 | 100,27 | 5,85 x 5 | 8H7 | 79 | 65 x 6 |
| 64 | 101,05 | 101,86 | 5,85 x 5 | 8H7 | 81 | 65 x 6 |
| 65 | 102,65 | 103,45 | 5,85 x 5 | 8H7 | 83 | 65 x 6 |
| 66 | 104,20 | 105,04 | 5,85 x 5 | 8H7 | 84 | 65 x 6 |
| 67 | 105,80 | 106,63 | 5,85 x 5 | 8H7 | 86 | 65 x 6 |
| 68 | 107,40 | 108,23 | 5,85 x 5 | 8H7 | 87 | 65 x 6 |
| 69 | 109,00 | 109,82 | 5,85 x 5 | 8H7 | 89 | 65 x 6 |
| 70 | 110,60 | 111,41 | 5,85 x 5 | 8H7 | 91 | 65 x 6 |
| 71 | 112,20 | 113,00 | 5,85 x 5 | 8H7 | 92 | 65 x 6 |
| 72 | 113,75 | 114,59 | 5,85 x 5 | 10H7 | 94 | 80 x 6 |
| 73 | 115,35 | 116,18 | 5,85 x 5 | 10H7 | 95 | 80 x 6 |
| 74 | 116,95 | 117,77 | 5,85 x 5 | 10H7 | 97 | 80 x 6 |
| 75 | 118,55 | 119,37 | 5,85 x 5 | 10H7 | 99 | 80 x 6 |
| 76 | 120,15 | 120,96 | 5,85 x 5 | 10H7 | 100 | 80 x 6 |
| 77 | 121,75 | 122,55 | 5,85 x 5 | 10H7 | 102 | 80 x 6 |
| 78 | 123,35 | 124,14 | 5,85 x 5 | 10H7 | 102 | 80 x 6 |
| 79 | 124,90 | 125,73 | 5,85 x 5 | 10H7 | 102 | 80 x 6 |
| 80 | 126,50 | 127,32 | 5,85 x 5 | 10H7 | 102 | 80 x 6 |
| 81 | 128,10 | 128,92 | 5,85 x 5 | 10H7 | 103 | 80 x 6 |
| 82 | 129,70 | 130,51 | 5,85 x 5 | 10H7 | 105 | 80 x 6 |
| 83 | 131,30 | 132,10 | 5,85 x 5 | 10H7 | 106 | 80 x 6 |
| 84 | 132,90 | 133,69 | 5,85 x 5 | 10H7 | 108 | 80 x 6 |
| 85 | 134,45 | 135,28 | 5,85 x 5 | 10H7 | 109 | 80 x 6 |
| 86 | 136,05 | 136,87 | 5,85 x 5 | 10H7 | 111 | 80 x 6 |
| 87 | 137,65 | 138,46 | 5,85 x 5 | 10H7 | 113 | 80 x 6 |
| 88 | 139,25 | 140,06 | 5,85 x 5 | 10H7 | 114 | 80 x 6 |

| z | dk (mm) | do (mm) | ed (BxH) (mm) | dv (mm) | dmax (mm) | Hub (BxH) (mm) |
|---|---|---|---|---|---|---|
| 89 | 140,85 | 141,65 | 5,85 x 5 | 10H7 | 116 | 80 x 6 |
| 90 | 142,45 | 143,24 | 5,85 x 5 | 10H7 | 117 | 80 x 6 |
| 91 | 144,00 | 144,83 | 5,85 x 5 | 12H7 | 119 | 90 x 6 |
| 92 | 145,60 | 146,42 | 5,85 x 5 | 12H7 | 121 | 90 x 6 |
| 93 | 147,20 | 148,01 | 5,85 x 5 | 12H7 | 122 | 90 x 6 |
| 94 | 148,80 | 149,61 | 5,85 x 5 | 12H7 | 124 | 90 x 6 |
| 95 | 150,40 | 151,20 | 5,85 x 5 | 12H7 | 125 | 90 x 6 |
| 96 | 152,00 | 152,79 | 5,85 x 5 | 12H7 | 127 | 90 x 6 |
| 97 | 153,55 | 154,38 | 5,85 x 5 | 12H7 | 129 | 90 x 6 |
| 98 | 155,15 | 155,97 | 5,85 x 5 | 12H7 | 130 | 90 x 6 |
| 99 | 156,75 | 157,56 | 5,85 x 5 | 12H7 | 132 | 90 x 6 |
| 100 | 158,35 | 159,15 | 5,85 x 5 | 12H7 | 133 | 90 x 6 |
| 101 | 159,95 | 160,75 | 5,85 x 5 | 12H7 | 135 | 95 x 6 |
| 102 | 161,55 | 162,34 | 5,85 x 5 | 12H7 | 137 | 95 x 6 |
| 103 | 163,15 | 163,93 | 5,85 x 5 | 12H7 | 138 | 95 x 6 |
| 104 | 164,70 | 165,52 | 5,85 x 5 | 12H7 | 140 | 95 x 6 |
| 105 | 166,30 | 167,11 | 5,85 x 5 | 12H7 | 141 | 95 x 6 |
| 106 | 167,90 | 168,70 | 5,85 x 5 | 12H7 | 143 | 95 x 6 |
| 107 | 169,50 | 170,30 | 5,85 x 5 | 12H7 | 145 | 95 x 6 |
| 108 | 171,10 | 171,89 | 5,85 x 5 | 12H7 | 146 | 95 x 6 |
| 109 | 172,70 | 173,48 | 5,85 x 5 | 16H7 | 148 | 110 x 6 |
| 110 | 174,25 | 175,07 | 5,85 x 5 | 16H7 | 149 | 110 x 6 |
| 111 | 175,85 | 176,66 | 5,85 x 5 | 16H7 | 151 | 110 x 6 |
| 112 | 177,45 | 178,25 | 5,85 x 5 | 16H7 | 152 | 110 x 6 |
| 113 | 179,05 | 179,85 | 5,85 x 5 | 16H7 | 154 | 110 x 6 |
| 114 | 180,65 | 181,44 | 5,85 x 5 | 16H7 | 156 | 110 x 6 |

## Synchronising pulleys easy drive® for cylindrical bore T-profile

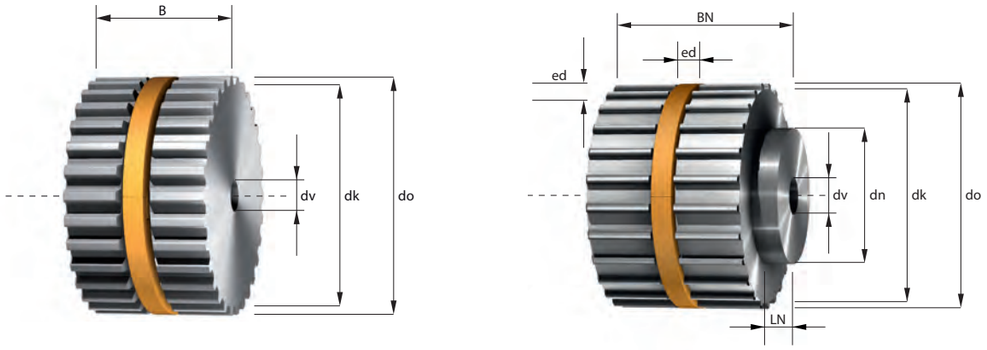


z = Number of teeth
dk = Outside diameter
do = Pitch diameter
ed = easy drive® groove
dv = Diameter of pre-bore
dmax = max. bore diameter without feather key groove
dh = Hub diameter
wh = Hub width

Min. diameter of the tension rollers without contra-flexure 60 mm, with contra-flexure 80 mm.

| Belt width | = b (mm) | 16 | 25 | 32 | 50 | 75 | 100 | 150 |
|---|---|---|---|---|---|---|---|---|
| Total width | = B (mm) | 18 | 27 | 34 | 52 | 77 | 102 | 152 |
| Total width with hub | = BN (mm) | 28 | 37 | 44 | 62 | 87 | 112 | 162 |

Other widths and larger sizes are available.

### T 10

| z | dk (mm) | do (mm) | ed (BxH) (mm) | dv (mm) | dmax (mm) | Hub (BxH) (mm) |
|---|---|---|---|---|---|---|
| 12 | 36,35 | 38,20 | 5,85 x 5 | 6H7 | 14 | 28 x 10 |
| 13 | 39,55 | 41,38 | 5,85 x 5 | 6H7 | 16 | 28 x 10 |
| 14 | 42,70 | 44,56 | 5,85 x 5 | 8H7 | 17 | 32 x 10 |
| 15 | 45,90 | 47,75 | 5,85 x 5 | 8H7 | 20 | 32 x 10 |
| 16 | 49,09 | 50,93 | 5,85 x 5 | 8H7 | 23 | 35 x 10 |
| 17 | 52,25 | 54,11 | 5,85 x 5 | 8H7 | 26 | 35 x 10 |
| 18 | 55,45 | 57,30 | 5,85 x 5 | 8/10H7 | 29 | 40 x 10 |
| 19 | 58,65 | 60,48 | 5,85 x 5 | 8/10H7 | 33 | 44 x 10 |
| 20 | 61,80 | 63,66 | 5,85 x 5 | 8/12H7 | 36 | 46 x 10 |
| 21 | 65,00 | 66,85 | 5,85 x 5 | 8/12H7 | 39 | 46 x 10 |
| 22 | 68,20 | 70,03 | 5,85 x 5 | 8/12H7 | 42 | 52 x 10 |
| 23 | 71,35 | 73,21 | 5,85 x 5 | 8/12H7 | 45 | 54 x 10 |
| 24 | 74,55 | 76,39 | 5,85 x 5 | 8/12H7 | 49 | 58 x 10 |
| 25 | 77,75 | 79,58 | 5,85 x 5 | 8/12H7 | 52 | 60 x 10 |
| 26 | 80,90 | 82,76 | 5,85 x 5 | 8/12H7 | 55 | 60 x 10 |

| z | dk (mm) | do (mm) | ed (BxH) (mm) | dv (mm) | dmax (mm) | Hub (BxH) (mm) |
|---|---|---|---|---|---|---|
| 27 | 84,10 | 85,94 | 5,85 x 5 | 8/12H7 | 58 | 60 x 10 |
| 28 | 87,25 | 89,13 | 5,85 x 5 | 8/12H7 | 61 | 60 x 10 |
| 29 | 90,45 | 92,31 | 5,85 x 5 | 8/12H7 | 64 | 60 x 10 |
| 30 | 93,65 | 95,49 | 5,85 x 5 | 8/12H7 | 68 | 60 x 10 |
| 31 | 96,80 | 98,68 | 5,85 x 5 | 12H7 | 71 | 60 x 10 |
| 32 | 100,00 | 101,86 | 5,85 x 5 | 10/12H7 | 74 | 65 x 10 |
| 33 | 103,20 | 105,04 | 5,85 x 5 | 12H7 | 77 | 65 x 10 |
| 34 | 106,35 | 108,23 | 5,85 x 5 | 12H7 | 80 | 65 x 10 |
| 35 | 109,55 | 111,41 | 5,85 x 5 | 16H7 | 84 | 65 x 10 |
| 36 | 112,75 | 114,59 | 5,85 x 5 | 10/16H7 | 87 | 70 x 10 |
| 37 | 115,90 | 117,77 | 5,85 x 5 | 16H7 | 90 | 70 x 10 |
| 38 | 119,10 | 120,96 | 5,85 x 5 | 16H7 | 93 | 70 x 10 |
| 39 | 122,30 | 124,14 | 5,85 x 5 | 16H7 | 96 | 70 x 10 |
| 40 | 125,45 | 127,32 | 5,85 x 5 | 12/16H7 | 99 | 80 x 10 |
| 41 | 128,65 | 130,51 | 5,85 x 5 | 16H7 | 99 | 80 x 10 |

= Standard ring sizes in stock
= Stock-pulleys in width 27 mm, 34 mm + 52 mm

### T 10

| z | dk (mm) | do (mm) | ed (BxH) (mm) | dv (mm) | dmax (mm) | Hub (BxH) (mm) |
|---|---|---|---|---|---|---|
| 42 | 131,85 | 133,69 | 5,85 x 5 | 16H7 | 102 | 80 x 10 |
| 43 | 135,00 | 136,87 | 5,85 x 5 | 16H7 | 105 | 80 x 10 |
| 44 | 138,20 | 140,06 | 5,85 x 5 | 12/16H7 | 108 | 88 x 10 |
| 45 | 141,40 | 143,24 | 5,85 x 5 | 16H7 | 111 | 90 x 10 |
| 46 | 144,50 | 146,42 | 5,85 x 5 | 16H7 | 115 | 90 x 10 |
| 47 | 147,75 | 149,61 | 5,85 x 5 | 16H7 | 118 | 90 x 10 |
| 48 | 150,95 | 152,79 | 5,85 x 5 | 16H7 | 121 | 95 x 10 |
| 49 | 154,10 | 155,97 | 5,85 x 5 | 16H7 | 124 | 95 x 10 |
| 50 | 157,30 | 159,15 | 5,85 x 5 | 16H7 | 127 | 95 x 10 |
| 51 | 160,50 | 162,34 | 5,85 x 5 | 16H7 | 131 | 95 x 10 |
| 52 | 163,65 | 165,52 | 5,85 x 5 | 16H7 | 134 | 95 x 10 |
| 53 | 166,85 | 168,70 | 5,85 x 5 | 16H7 | 137 | 95 x 10 |
| 54 | 170,05 | 171,89 | 5,85 x 5 | 16H7 | 140 | 110 x 10 |
| 55 | 173,20 | 175,07 | 5,85 x 5 | 16H7 | 143 | 110 x 10 |
| 56 | 176,40 | 178,25 | 5,85 x 5 | 16H7 | 146 | 110 x 10 |
| 57 | 179,60 | 181,44 | 5,85 x 5 | 16H7 | 150 | 110 x 10 |
| 58 | 182,75 | 184,62 | 5,85 x 5 | 16H7 | 153 | 110 x 10 |
| 59 | 185,95 | 187,80 | 5,85 x 5 | 16H7 | 156 | 110 x 10 |
| 60 | 189,15 | 190,99 | 5,85 x 5 | 16H7 | 159 | 110 x 10 |
| 61 | 192,30 | 194,17 | 5,85 x 5 | 16H7 | 162 | 110 x 10 |
| 62 | 195,50 | 197,35 | 5,85 x 5 | 16H7 | 166 | 110 x 10 |
| 63 | 198,70 | 200,54 | 5,85 x 5 | 16H7 | 169 | 140 x 10 |
| 64 | 201,85 | 203,72 | 5,85 x 5 | 16H7 | 172 | 140 x 10 |
| 65 | 205,05 | 206,90 | 5,85 x 5 | 16H7 | 175 | 140 x 10 |
| 66 | 208,25 | 210,08 | 5,85 x 5 | 16H7 | 178 | 140 x 10 |
| 67 | 211,40 | 213,27 | 5,85 x 5 | 16H7 | 181 | 140 x 10 |
| 68 | 214,60 | 216,45 | 5,85 x 5 | 16H7 | 185 | 140 x 10 |
| 69 | 217,80 | 219,63 | 5,85 x 5 | 16H7 | 188 | 140 x 10 |
| 70 | 220,95 | 222,82 | 5,85 x 5 | 16H7 | 191 | 140 x 10 |
| 71 | 224,15 | 226,00 | 5,85 x 5 | 16H7 | 194 | 140 x 10 |
| 72 | 227,35 | 229,18 | 5,85 x 5 | 16H7 | 197 | 140 x 10 |
| 73 | 230,50 | 232,37 | 5,85 x 5 | 20H7 | 201 | 140 x 10 |
| 74 | 233,70 | 235,55 | 5,85 x 5 | 20H7 | 204 | 140 x 10 |
| 75 | 236,90 | 238,73 | 5,85 x 5 | 20H7 | 207 | 140 x 10 |
| 76 | 240,05 | 241,92 | 5,85 x 5 | 20H7 | 210 | 140 x 10 |
| 77 | 243,25 | 245,10 | 5,85 x 5 | 20H7 | 213 | 160 x 10 |
| 78 | 246,40 | 248,28 | 5,85 x 5 | 20H7 | 216 | 160 x 10 |
| 79 | 249,60 | 251,46 | 5,85 x 5 | 20H7 | 216 | 160 x 10 |
| 80 | 252,80 | 254,65 | 5,85 x 5 | 20H7 | 218 | 160 x 10 |
| 81 | 255,95 | 257,83 | 5,85 x 5 | 20H7 | 221 | 160 x 10 |
| 82 | 259,15 | 261,01 | 5,85 x 5 | 20H7 | 224 | 160 x 10 |
| 83 | 262,35 | 264,20 | 5,85 x 5 | 20H7 | 227 | 160 x 10 |
| 84 | 265,50 | 267,38 | 5,85 x 5 | 20H7 | 231 | 160 x 10 |
| 85 | 268,70 | 270,56 | 5,85 x 5 | 20H7 | 234 | 160 x 10 |
| 86 | 271,90 | 273,75 | 5,85 x 5 | 20H7 | 237 | 160 x 10 |

| z | dk (mm) | do (mm) | ed (BxH) (mm) | dv (mm) | dmax (mm) | Hub (BxH) (mm) |
|---|---|---|---|---|---|---|
| 87 | 275,05 | 276,93 | 5,85 x 5 | 20H7 | 240 | 160 x 10 |
| 88 | 278,25 | 280,11 | 5,85 x 5 | 20H7 | 243 | 160 x 10 |
| 89 | 281,45 | 283,30 | 5,85 x 5 | 20H7 | 246 | 160 x 10 |
| 90 | 284,60 | 286,48 | 5,85 x 5 | 20H7 | 250 | 160 x 10 |
| 91 | 287,80 | 289,66 | 5,85 x 5 | 20H7 | 253 | 160 x 10 |
| 92 | 291,00 | 292,85 | 5,85 x 5 | 20H7 | 256 | 160 x 10 |
| 93 | 294,15 | 296,03 | 5,85 x 5 | 20H7 | 259 | 160 x 10 |
| 94 | 297,35 | 299,21 | 5,85 x 5 | 20H7 | 262 | 160 x 10 |
| 95 | 300,55 | 302,39 | 5,85 x 5 | 24H7 | 266 | 160 x 10 |
| 96 | 303,70 | 305,58 | 5,85 x 5 | 24H7 | 269 | 180 x 10 |
| 97 | 306,90 | 308,76 | 5,85 x 5 | 24H7 | 272 | 180 x 10 |
| 98 | 310,10 | 311,94 | 5,85 x 5 | 24H7 | 275 | 180 x 10 |
| 99 | 313,25 | 315,13 | 5,85 x 5 | 24H7 | 278 | 180 x 10 |
| 100 | 316,45 | 318,31 | 5,85 x 5 | 24H7 | 281 | 180 x 10 |
| 101 | 319,65 | 321,49 | 5,85 x 5 | 24H7 | 285 | 180 x 10 |
| 102 | 322,80 | 324,68 | 5,85 x 5 | 24H7 | 288 | 180 x 10 |
| 103 | 326,00 | 327,86 | 5,85 x 5 | 24H7 | 291 | 180 x 10 |
| 104 | 329,20 | 331,04 | 5,85 x 5 | 24H7 | 294 | 180 x 10 |
| 105 | 332,35 | 334,23 | 5,85 x 5 | 24H7 | 297 | 180 x 10 |
| 106 | 335,55 | 337,41 | 5,85 x 5 | 24H7 | 301 | 180 x 10 |
| 107 | 338,75 | 340,59 | 5,85 x 5 | 24H7 | 304 | 180 x 10 |
| 108 | 341,90 | 343,77 | 5,85 x 5 | 24H7 | 307 | 180 x 10 |
| 109 | 345,10 | 346,96 | 5,85 x 5 | 24H7 | 310 | 180 x 10 |
| 110 | 348,30 | 350,14 | 5,85 x 5 | 24H7 | 313 | 180 x 10 |
| 111 | 351,45 | 353,32 | 5,85 x 5 | 24H7 | 316 | 180 x 10 |
| 112 | 354,65 | 356,51 | 5,85 x 5 | 24H7 | 320 | 180 x 10 |
| 113 | 357,85 | 359,69 | 5,85 x 5 | 24H7 | 323 | 180 x 10 |
| 114 | 361,00 | 362,87 | 5,85 x 5 | 24H7 | 326 | 180 x 10 |

## Synchronising pulleys easy drive® for cylindrical bore T-profile

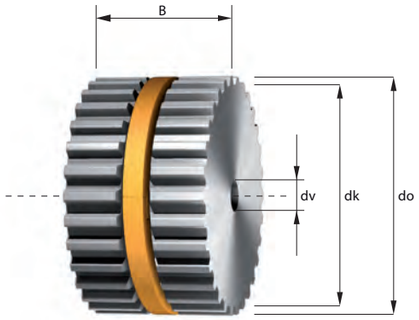


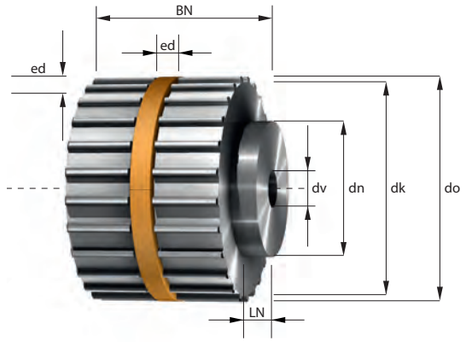


z = Number of teeth
dk = Outside diameter
do = Pitch diameter
ed = easy drive® groove
dv = Diameter of pre-bore
dmax = max. bore diameter without feather key groove
dh = Hub diameter
wh = Hub width

Min. diameter of the tension rollers without contra-flexure 120 mm, with contra-flexure 150 mm.

| Belt width | = b (mm) | 16 | 25 | 32 | 50 | 75 | 100 | 125 | 150 |
|---|---|---|---|---|---|---|---|---|---|
| Total width | = B (mm) | 18 | 27 | 34 | 52 | 77 | 102 | 127 | 152 |
| Total width with hub | = BN (mm) | 28 | 37 | 44 | 62 | 87 | 112 | 137 | 162 |

Other widths and larger sizes are available.

### T 20

| z | dk (mm) | do (mm) | ed (BxH) (mm) | dv (mm) | dmax (mm) | Hub (BxH) (mm) |
|---|---|---|---|---|---|---|
| 15 | 92,65 | 98,49 | * | 12H7 | 63 | 60 x 10 |
| 16 | 99,00 | 101,86 | * | 12H7 | 69 | 70 x 10 |
| 17 | 105,35 | 108,23 | * | 12H7 | 75 | 70 x 10 |
| 18 | 111,75 | 114,59 | * | 12H7 | 82 | 70 x 10 |
| 19 | 118,10 | 120,96 | * | 12H7 | 88 | 80 x 10 |
| 20 | 124,45 | 127,32 | * | 16H7 | 95 | 90 x 10 |
| 21 | 130,85 | 133,69 | * | 16H7 | 101 | 90 x 10 |
| 22 | 137,20 | 140,06 | * | 16H7 | 107 | 90 x 10 |
| 23 | 143,55 | 146,42 | * | 16H7 | 114 | 90 x 10 |
| 24 | 149,95 | 152,79 | * | 16H7 | 120 | 95 x 10 |
| 25 | 156,30 | 159,15 | * | 16H7 | 126 | 95 x 10 |
| 26 | 162,65 | 165,52 | * | 16H7 | 133 | 95 x 10 |
| 27 | 169,05 | 171,89 | * | 16H7 | 139 | 110 x 10 |
| 28 | 175,40 | 178,25 | * | 16H7 | 145 | 110 x 10 |
| 29 | 181,75 | 184,62 | * | 16H7 | 152 | 110 x 10 |

| z | dk (mm) | do (mm) | ed (BxH) (mm) | dv (mm) | dmax (mm) | Hub (BxH) (mm) |
|---|---|---|---|---|---|---|
| 30 | 188,15 | 190,99 | * | 16H7 | 158 | 110 x 10 |
| 31 | 194,50 | 197,35 | * | 16H7 | 165 | 110 x 10 |
| 32 | 200,85 | 203,72 | * | 16H7 | 171 | 110 x 10 |
| 33 | 207,25 | 210,08 | * | 16H7 | 177 | 110 x 10 |
| 34 | 213,60 | 216,45 | * | 16H7 | 184 | 110 x 10 |
| 35 | 219,95 | 222,82 | * | 16H7 | 190 | 110 x 10 |
| 36 | 226,35 | 229,18 | * | 18H7 | 196 | 110 x 10 |
| 37 | 232,70 | 235,55 | * | 18H7 | 203 | 110 x 10 |
| 38 | 239,05 | 241,92 | * | 18H7 | 209 | 110 x 10 |
| 39 | 245,40 | 248,28 | * | 18H7 | 215 | 110 x 10 |
| 40 | 251,80 | 254,65 | * | 18H7 | 222 | 110 x 10 |
| 41 | 258,15 | 261,01 | * | 18H7 | 228 | 130 x 10 |
| 42 | 264,50 | 267,38 | * | 18H7 | 235 | 130 x 10 |
| 43 | 270,90 | 273,75 | * | 18H7 | 241 | 130 x 10 |
| 44 | 277,25 | 280,11 | * | 18H7 | 247 | 130 x 10 |

* On request



### T 20

| z | dk (mm) | do (mm) | ed (BxH) (mm) | dv (mm) | dmax (mm) | Hub (BxH) (mm) |
|---|---|---|---|---|---|---|
| 45 | 283,60 | 286,48 | * | 18H7 | 254 | 130 x 10 |
| 46 | 290,00 | 292,85 | * | 18H7 | 260 | 130 x 10 |
| 47 | 296,35 | 299,21 | * | 18H7 | 266 | 130 x 10 |
| 48 | 302,70 | 305,58 | * | 18H7 | 273 | 130 x 10 |
| 49 | 309,10 | 311,94 | * | 20H7 | 279 | 130 x 10 |
| 50 | 315,45 | 318,31 | * | 20H7 | 285 | 140 x 10 |
| 51 | 321,80 | 324,68 | * | 20H7 | 292 | 140 x 10 |
| 52 | 328,20 | 331,04 | * | 20H7 | 298 | 140 x 10 |
| 53 | 334,55 | 337,41 | * | 20H7 | 305 | 140 x 10 |
| 54 | 340,90 | 343,77 | * | 20H7 | 311 | 140 x 10 |
| 55 | 347,30 | 350,14 | * | 20H7 | 317 | 140 x 10 |
| 56 | 353,65 | 356,51 | * | 20H7 | 324 | 140 x 10 |
| 57 | 360,00 | 362,87 | * | 20H7 | 330 | 140 x 10 |
| 58 | 366,40 | 369,24 | * | 20H7 | 336 | 140 x 10 |
| 59 | 372,75 | 375,61 | * | 20H7 | 343 | 140 x 10 |
| 60 | 379,10 | 381,97 | * | 20H7 | 349 | 140 x 10 |
| 61 | 385,50 | 388,34 | * | 20H7 | 356 | 140 x 10 |
| 62 | 391,85 | 394,70 | * | 20H7 | 362 | 140 x 10 |
| 63 | 398,20 | 401,07 | * | 20H7 | 368 | 140 x 10 |
| 64 | 404,55 | 407,44 | * | 20H7 | 375 | 140 x 10 |
| 65 | 410,95 | 413,80 | * | 20H7 | 381 | 140 x 10 |
| 66 | 417,30 | 420,17 | * | 20H7 | 387 | 140 x 10 |
| 67 | 423,65 | 426,54 | * | 20H7 | 394 | 140 x 10 |
| 68 | 430,05 | 432,90 | * | 20H7 | 400 | 140 x 10 |
| 69 | 436,40 | 439,27 | * | 20H7 | 406 | 140 x 10 |
| 70 | 442,75 | 445,63 | * | 20H7 | 413 | 140 x 10 |
| 71 | 449,15 | 452,00 | * | 20H7 | 419 | 140 x 10 |
| 72 | 455,50 | 458,37 | * | 20H7 | 426 | 140 x 10 |
| 73 | 461,85 | 464,73 | * | 30H7 | 432 | 160 x 10 |
| 74 | 468,25 | 471,10 | * | 30H7 | 438 | 160 x 10 |
| 75 | 474,60 | 477,46 | * | 30H7 | 445 | 160 x 10 |
| 76 | 480,95 | 483,83 | * | 30H7 | 451 | 160 x 10 |
| 77 | 487,35 | 490,20 | * | 30H7 | 457 | 160 x 10 |
| 78 | 493,70 | 496,56 | * | 30H7 | 464 | 160 x 10 |
| 79 | 500,05 | 502,93 | * | 30H7 | 470 | 160 x 10 |
| 80 | 506,45 | 509,30 | * | 30H7 | 471 | |
| 81 | 512,80 | 515,66 | * | 30H7 | 478 | |
| 82 | 519,15 | 522,03 | * | 30H7 | 484 | |
| 83 | 525,55 | 528,39 | * | 30H7 | 491 | |
| 84 | 531,90 | 534,76 | * | 30H7 | 497 | |
| 85 | 538,25 | 541,13 | * | 30H7 | 503 | |
| 86 | 544,65 | 547,49 | * | 30H7 | 510 | |
| 87 | 551,00 | 553,86 | * | 30H7 | 516 | |
| 88 | 557,35 | 560,23 | * | 30H7 | 522 | |
| 89 | 563,70 | 566,59 | * | 30H7 | 529 | |

| z | dk (mm) | do (mm) | ed (BxH) (mm) | dv (mm) | dmax (mm) | Hub (BxH) (mm) |
|---|---|---|---|---|---|---|
| 90 | 570,10 | 572,96 | * | 30H7 | 535 | |
| 91 | 576,45 | 579,32 | * | 30H7 | 541 | |
| 92 | 582,80 | 585,69 | * | 30H7 | 548 | |
| 93 | 589,20 | 592,06 | * | 30H7 | 554 | |
| 94 | 595,55 | 598,42 | * | 30H7 | 561 | |
| 95 | 601,90 | 604,79 | * | 40H7 | 567 | |
| 96 | 608,30 | 611,15 | * | 40H7 | 573 | |
| 97 | 614,65 | 617,52 | * | 40H7 | 580 | |
| 98 | 621,00 | 623,89 | * | 40H7 | 586 | |
| 99 | 627,40 | 630,25 | * | 40H7 | 592 | |
| 100 | 633,75 | 636,62 | * | 40H7 | 599 | |
| 101 | 640,10 | 642,99 | * | 40H7 | 605 | |
| 102 | 646,50 | 649,35 | * | 40H7 | 612 | |
| 103 | 652,85 | 655,72 | * | 40H7 | 618 | |
| 104 | 659,20 | 662,08 | * | 40H7 | 624 | |
| 105 | 665,60 | 668,45 | * | 40H7 | 631 | |
| 106 | 671,95 | 674,82 | * | 40H7 | 637 | |
| 107 | 678,30 | 681,18 | * | 40H7 | 643 | |
| 108 | 684,70 | 687,55 | * | 40H7 | 650 | |
| 109 | 691,05 | 693,92 | * | 40H7 | 656 | |
| 110 | 697,40 | 700,28 | * | 40H7 | 662 | |
| 111 | 703,80 | 706,65 | * | 40H7 | 669 | |
| 112 | 710,15 | 713,01 | * | 40H7 | 675 | |
| 113 | 716,50 | 719,38 | * | 40H7 | 682 | |
| 114 | 722,85 | 725,75 | * | 40H7 | 688 | |

## Synchronising pulleys easy drive® for cylindrical bore AT-profile

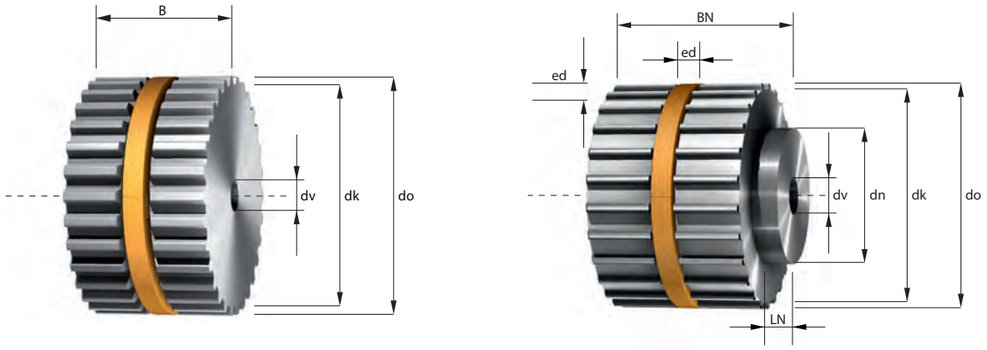


z = Number of teeth
dk = Outside diameter
do = Pitch diameter
ed = easy drive® groove
dv = Diameter of pre-bore
dmax = max. bore diameter without feather key groove
dh = Hub diameter
wh = Hub width

Min. diameter of the tension rollers without contra-flexure 15 mm, with contra-flexure 20 mm.

| Belt width | = b (mm) | 16 | 25 | 32 | 50 |
|---|---|---|---|---|---|
| Total width | = B (mm) | 18 | 27 | 34 | 52 |
| Total width with hub | = BN (mm) | 24 | 33 | 40 | 58 |

Other widths and larger sizes are available.

### AT 3

| z | dk (mm) | do (mm) | ed (BxH) (mm) | dv (mm) | dmax (mm) | Hub (BxH) (mm) |
|---|---|---|---|---|---|---|
| 22 | 20,60 | 21,01 | 5,85 x 4 | 6H7 | 5 | 14 x 6 |
| 23 | 21,55 | 21,96 | 5,85 x 4 | 6H7 | 6 | 14 x 6 |
| 24 | 22,51 | 22,92 | 5,85 x 4 | 6H7 | 7 | 14 x 6 |
| 25 | 23,46 | 23,87 | 5,85 x 4 | 6H7 | 8 | 16 x 6 |
| 26 | 24,42 | 24,83 | 5,85 x 4 | 6H7 | 9 | 16 x 6 |
| 27 | 25,37 | 25,78 | 5,85 x 4 | 6H7 | 10 | 16 x 6 |
| 28 | 26,33 | 26,74 | 5,85 x 4 | 6H7 | 10 | 16 x 6 |
| 29 | 27,28 | 27,69 | 5,85 x 4 | 6H7 | 12 | 16 x 6 |
| 30 | 28,24 | 28,65 | 5,85 x 4 | 6H7 | 12 | 20 x 6 |
| 31 | 29,19 | 29,60 | 5,85 x 4 | 6H7 | 14 | 20 x 6 |
| 32 | 30,15 | 30,56 | 5,85 x 5 | 6H7 | 10 | 20 x 6 |
| 33 | 31,10 | 31,51 | 5,85 x 5 | 6H7 | 11 | 20 x 6 |
| 34 | 32,06 | 32,47 | 5,85 x 5 | 6H7 | 12 | 20 x 6 |
| 35 | 33,01 | 33,42 | 5,85 x 5 | 6H7 | 13 | 20 x 6 |
| 36 | 33,97 | 34,38 | 5,85 x 5 | 6H7 | 14 | 22 x 6 |

| z | dk (mm) | do (mm) | ed (BxH) (mm) | dv (mm) | dmax (mm) | Hub (BxH) (mm) |
|---|---|---|---|---|---|---|
| 37 | 34,92 | 35,33 | 5,85 x 5 | 6H7 | 14 | 22 x 6 |
| 38 | 35,88 | 36,29 | 5,85 x 5 | 6H7 | 15 | 22 x 6 |
| 39 | 36,83 | 37,24 | 5,85 x 5 | 6H7 | 16 | 22 x 6 |
| 40 | 37,79 | 38,20 | 5,85 x 5 | 6H7 | 17 | 26 x 6 |
| 41 | 38,74 | 39,15 | 5,85 x 5 | 6H7 | 18 | 26 x 6 |
| 42 | 39,70 | 40,11 | 5,85 x 5 | 6H7 | 19 | 26 x 6 |
| 43 | 40,65 | 41,06 | 5,85 x 5 | 6H7 | 20 | 26 x 6 |
| 44 | 41,61 | 42,02 | 5,85 x 5 | 6H7 | 21 | 30 x 6 |
| 45 | 42,56 | 42,97 | 5,85 x 5 | 6H7 | 22 | 30 x 6 |
| 46 | 43,52 | 43,93 | 5,85 x 5 | 6H7 | 23 | 30 x 6 |
| 47 | 44,47 | 44,88 | 5,85 x 5 | 6H7 | 24 | 30 x 6 |
| 48 | 45,43 | 45,84 | 5,85 x 5 | 6H7 | 25 | 34 x 6 |
| 49 | 46,38 | 46,79 | 5,85 x 5 | 6H7 | 26 | 34 x 6 |
| 50 | 47,34 | 47,75 | 5,85 x 5 | 6H7 | 27 | 34 x 6 |
| 51 | 48,29 | 48,70 | 5,85 x 5 | 6H7 | 28 | 34 x 6 |

= Standard ring sizes in stock

### AT 3

| z | dk (mm) | do (mm) | ed (BxH) (mm) | dv (mm) | dmax (mm) | Hub (BxH) (mm) |
|---|---|---|---|---|---|---|
| 52 | 49,25 | 49,66 | 5,85 x 5 | 6H7 | 29 | 34 x 6 |
| 53 | 50,20 | 50,61 | 5,85 x 5 | 6H7 | 30 | 34 x 6 |
| 54 | 51,16 | 51,57 | 5,85 x 5 | 6H7 | 31 | 34 x 6 |
| 55 | 52,11 | 52,52 | 5,85 x 5 | 6H7 | 32 | 34 x 6 |
| 56 | 53,07 | 53,48 | 5,85 x 5 | 6H7 | 33 | 34 x 6 |
| 57 | 54,02 | 54,43 | 5,85 x 5 | 6H7 | 34 | 34 x 6 |
| 58 | 54,98 | 55,39 | 5,85 x 5 | 6H7 | 35 | 34 x 6 |
| 59 | 55,93 | 56,34 | 5,85 x 5 | 6H7 | 36 | 34 x 6 |
| 60 | 56,89 | 57,30 | 5,85 x 5 | 6H7 | 36 | 38 x 6 |
| 61 | 57,84 | 58,25 | 5,85 x 5 | 6H7 | 37 | 38 x 6 |
| 62 | 58,80 | 59,21 | 5,85 x 5 | 6H7 | 38 | 38 x 6 |
| 63 | 59,75 | 60,16 | 5,85 x 5 | 6H7 | 39 | 38 x 6 |
| 64 | 60,71 | 61,12 | 5,85 x 5 | 6H7 | 40 | 38 x 6 |
| 65 | 61,66 | 62,07 | 5,85 x 5 | 6H7 | 41 | 38 x 6 |
| 66 | 62,62 | 63,03 | 5,85 x 5 | 6H7 | 42 | 38 x 6 |
| 67 | 63,57 | 63,98 | 5,85 x 5 | 6H7 | 43 | 38 x 6 |
| 68 | 64,53 | 64,94 | 5,85 x 5 | 6H7 | 44 | 38 x 6 |
| 69 | 65,48 | 65,89 | 5,85 x 5 | 6H7 | 45 | 38 x 6 |
| 70 | 66,44 | 66,85 | 5,85 x 5 | 6H7 | 46 | 38 x 6 |
| 71 | 67,39 | 67,80 | 5,85 x 5 | 6H7 | 47 | 38 x 6 |
| 72 | 68,34 | 68,75 | 5,85 x 5 | 6H7 | 48 | 50 x 6 |
| 73 | 69,30 | 69,71 | 5,85 x 5 | 8H7 | 49 | 50 x 6 |
| 74 | 70,25 | 70,66 | 5,85 x 5 | 8H7 | 50 | 50 x 6 |
| 75 | 71,21 | 71,62 | 5,85 x 5 | 8H7 | 51 | 50 x 6 |
| 76 | 72,16 | 72,57 | 5,85 x 5 | 8H7 | 52 | 50 x 6 |
| 77 | 73,12 | 73,53 | 5,85 x 5 | 8H7 | 53 | 50 x 6 |
| 78 | 74,07 | 74,48 | 5,85 x 5 | 8H7 | 54 | 50 x 6 |
| 79 | 75,03 | 75,44 | 5,85 x 5 | 8H7 | 55 | 50 x 6 |
| 80 | 75,98 | 76,39 | 5,85 x 5 | 8H7 | 56 | 50 x 6 |
| 81 | 76,94 | 77,35 | 5,85 x 5 | 8H7 | 57 | 50 x 6 |
| 82 | 77,89 | 78,30 | 5,85 x 5 | 8H7 | 57 | 50 x 6 |
| 83 | 78,85 | 79,26 | 5,85 x 5 | 8H7 | 58 | 50 x 6 |
| 84 | 79,80 | 80,21 | 5,85 x 5 | 8H7 | 59 | 50 x 6 |
| 85 | 80,76 | 81,17 | 5,85 x 5 | 8H7 | 60 | 50 x 6 |
| 86 | 81,71 | 82,12 | 5,85 x 5 | 8H7 | 61 | 50 x 6 |
| 87 | 82,67 | 83,08 | 5,85 x 5 | 8H7 | 62 | 50 x 6 |
| 88 | 83,62 | 84,03 | 5,85 x 5 | 8H7 | 63 | 50 x 6 |
| 89 | 84,58 | 84,99 | 5,85 x 5 | 8H7 | 64 | 50 x 6 |
| 90 | 85,53 | 85,94 | 5,85 x 5 | 8H7 | 65 | 50 x 6 |
| 91 | 86,49 | 86,90 | 5,85 x 5 | 8H7 | 66 | 65 x 6 |
| 92 | 87,44 | 87,85 | 5,85 x 5 | 8H7 | 67 | 65 x 6 |
| 93 | 88,40 | 88,81 | 5,85 x 5 | 8H7 | 68 | 65 x 6 |
| 94 | 89,35 | 89,76 | 5,85 x 5 | 8H7 | 69 | 65 x 6 |
| 95 | 90,31 | 90,72 | 5,85 x 5 | 8H7 | 70 | 65 x 6 |
| 96 | 91,26 | 91,67 | 5,85 x 5 | 8H7 | 71 | 65 x 6 |

| z | dk (mm) | do (mm) | ed (BxH) (mm) | dv (mm) | dmax (mm) | Hub (BxH) (mm) |
|---|---|---|---|---|---|---|
| 97 | 92,22 | 92,63 | 5,85 x 5 | 8H7 | 72 | 65 x 6 |
| 98 | 93,17 | 93,58 | 5,85 x 5 | 8H7 | 73 | 65 x 6 |
| 99 | 94,13 | 94,54 | 5,85 x 5 | 8H7 | 74 | 65 x 6 |
| 100 | 95,08 | 95,49 | 5,85 x 5 | 8H7 | 75 | 65 x 6 |
| 101 | 96,04 | 96,45 | 5,85 x 5 | 8H7 | 76 | 65 x 6 |
| 102 | 96,99 | 97,40 | 5,85 x 5 | 8H7 | 77 | 65 x 6 |
| 103 | 97,95 | 98,36 | 5,85 x 5 | 8H7 | 78 | 65 x 6 |
| 104 | 98,90 | 99,31 | 5,85 x 5 | 8H7 | 79 | 65 x 6 |
| 105 | 99,86 | 100,27 | 5,85 x 5 | 8H7 | 80 | 65 x 6 |
| 106 | 100,81 | 101,22 | 5,85 x 5 | 10H7 | 80 | 65 x 6 |
| 107 | 101,77 | 102,18 | 5,85 x 5 | 10H7 | 81 | 65 x 6 |
| 108 | 102,72 | 103,13 | 5,85 x 5 | 10H7 | 82 | 65 x 6 |
| 109 | 103,68 | 104,09 | 5,85 x 5 | 10H7 | 83 | 65 x 6 |
| 110 | 104,63 | 105,04 | 5,85 x 5 | 10H7 | 84 | 65 x 6 |
| 111 | 105,59 | 106,00 | 5,85 x 5 | 10H7 | 85 | 65 x 6 |
| 112 | 106,54 | 106,95 | 5,85 x 5 | 10H7 | 86 | 65 x 6 |
| 113 | 107,50 | 107,91 | 5,85 x 5 | 10H7 | 87 | 65 x 6 |
| 114 | 108,45 | 108,86 | 5,85 x 5 | 10H7 | 88 | 65 x 6 |

## Synchronising pulleys easy drive® for cylindrical bore AT-profile

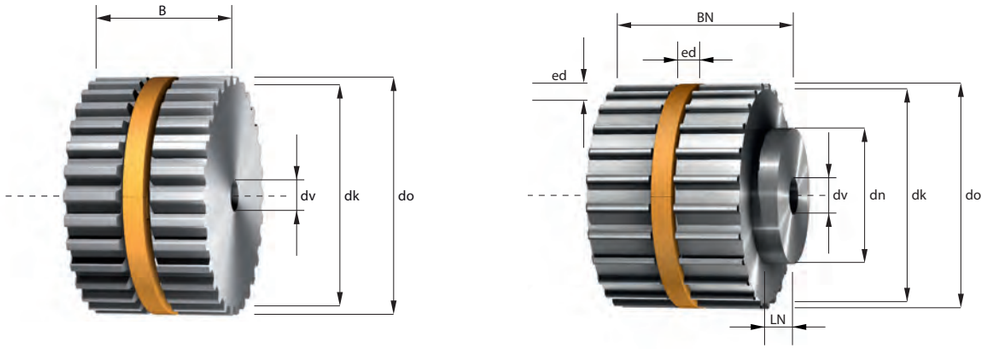


z = Number of teeth
dk = Outside diameter
do = Pitch diameter
ed = easy drive® groove
dv = Diameter of pre-bore
dmax = max. bore diameter without feather key groove
dh = Hub diameter
wh = Hub width

Min. diameter of the tension rollers without contra-flexure 18 mm, with contra-flexure 50 mm.

| Belt width | = b (mm) | 16 | 20 | 25 | 32 | 50 | 75 | 100 | 150 |
|---|---|---|---|---|---|---|---|---|---|
| Total width | = B (mm) | 18 | 22 | 27 | 34 | 52 | 77 | 102 | 152 |
| Total width with hub | = BN (mm) | 24 | 28 | 33 | 40 | 58 | 83 | 108 | 158 |

Other widths and larger sizes are available.

### AT 5

| z | dk (mm) | do (mm) | ed (BxH) (mm) | dv (mm) | dmax (mm) | Hub (BxH) (mm) |
|---|---|---|---|---|---|---|
| 14 | 21,05 | 22,23 | 5,85 x 4 | 6H7 | 6 | 14 x 6 |
| 15 | 22,65 | 23,87 | 5,85 x 4 | 6H7 | 7 | 16 x 6 |
| 16 | 24,24 | 25,46 | 5,85 x 4 | 6H7 | 9 | 18 x 6 |
| 17 | 25,84 | 27,06 | 5,85 x 4 | 6H7 | 10 | 18 x 6 |
| 18 | 27,43 | 28,65 | 5,85 x 4 | 6H7 | 12 | 20 x 6 |
| 19 | 29,02 | 30,24 | 5,85 x 4 | 6H7 | 14 | 22 x 6 |
| 20 | 30,60 | 31,83 | 5,85 x 5 | 6H7 | 10 | 24 x 6 |
| 21 | 32,20 | 33,42 | 5,85 x 5 | 6H7 | 12 | 24 x 6 |
| 22 | 33,79 | 35,01 | 5,85 x 5 | 6H7 | 13 | 24 x 6 |
| 23 | 35,39 | 36,61 | 5,85 x 5 | 8H7 | 15 | 24 x 6 |
| 24 | 36,98 | 38,20 | 5,85 x 5 | 8H7 | 16 | 26 x 6 |
| 25 | 38,57 | 39,79 | 5,85 x 5 | 8H7 | 19 | 26 x 6 |
| 26 | 40,16 | 41,38 | 5,85 x 5 | 8H7 | 20 | 26 x 6 |
| 27 | 41,75 | 42,97 | 5,85 x 5 | 8H7 | 22 | 30 x 6 |
| 28 | 43,34 | 44,56 | 5,85 x 5 | 8H7 | 23 | 32 x 6 |

| z | dk (mm) | do (mm) | ed (BxH) (mm) | dv (mm) | dmax (mm) | Hub (BxH) (mm) |
|---|---|---|---|---|---|---|
| 29 | 44,93 | 46,15 | 5,85 x 5 | 8H7 | 25 | 32 x 6 |
| 30 | 46,53 | 47,75 | 5,85 x 5 | 8H7 | 27 | 34 x 6 |
| 31 | 48,12 | 49,34 | 5,85 x 5 | 8H7 | 28 | 34 x 6 |
| 32 | 49,71 | 50,93 | 5,85 x 5 | 8H7 | 30 | 38 x 6 |
| 33 | 51,30 | 52,52 | 5,85 x 5 | 8H7 | 31 | 38 x 6 |
| 34 | 52,89 | 54,11 | 5,85 x 5 | 8H7 | 33 | 38 x 6 |
| 35 | 54,48 | 55,7 | 5,85 x 5 | 8H7 | 34 | 38 x 6 |
| 36 | 56,08 | 57,3 | 5,85 x 5 | 8H7 | 36 | 38 x 6 |
| 37 | 57,67 | 58,89 | 5,85 x 5 | 8H7 | 38 | 38 x 6 |
| 38 | 59,26 | 60,48 | 5,85 x 5 | 8H7 | 39 | 38 x 6 |
| 39 | 60,85 | 62,07 | 5,85 x 5 | 8H7 | 40 | 38 x 6 |
| 40 | 62,44 | 63,66 | 5,85 x 5 | 8H7 | 40 | 40 x 6 |
| 41 | 64,03 | 65,25 | 5,85 x 5 | 8H7 | 40 | 40 x 6 |
| 42 | 65,63 | 66,85 | 5,85 x 5 | 8H7 | 40 | 40 x 6 |
| 43 | 67,22 | 68,44 | 5,85 x 5 | 8H7 | 42 | 40 x 6 |

= Standard ring sizes in stock
= Stock-pulleys in width 27 mm, 34 mm + 52 mm

### AT 5

| z | dk (mm) | do (mm) | ed (BxH) (mm) | dv (mm) | dmax (mm) | Hub (BxH) (mm) |
|---|---|---|---|---|---|---|
| 44 | 68,81 | 70,03 | 5,85 x 5 | 8H7 | 43 | 50 x 6 |
| 45 | 70,40 | 71,62 | 5,85 x 5 | 8H7 | 45 | 50 x 6 |
| 46 | 71,99 | 73,21 | 5,85 x 5 | 8H7 | 47 | 50 x 6 |
| 47 | 73,58 | 74,80 | 5,85 x 5 | 8H7 | 48 | 50 x 6 |
| 48 | 75,19 | 76,39 | 5,85 x 5 | 8H7 | 50 | 50 x 6 |
| 49 | 76,77 | 77,99 | 5,85 x 5 | 8H7 | 50 | 50 x 6 |
| 50 | 78,36 | 79,58 | 5,85 x 5 | 8H7 | 53 | 50 x 6 |
| 51 | 79,95 | 81,17 | 5,85 x 5 | 8H7 | 55 | 50 x 6 |
| 52 | 81,54 | 82,76 | 5,85 x 5 | 8H7 | 57 | 50 x 6 |
| 53 | 83,13 | 84,35 | 5,85 x 5 | 8H7 | 58 | 50 x 6 |
| 54 | 84,72 | 85,94 | 5,85 x 5 | 8H7 | 60 | 50 x 6 |
| 55 | 86,32 | 87,54 | 5,85 x 5 | 8H7 | 61 | 50 x 6 |
| 56 | 87,91 | 89,13 | 5,85 x 5 | 8H7 | 63 | 50 x 6 |
| 57 | 89,50 | 90,72 | 5,85 x 5 | 8H7 | 63 | 50 x 6 |
| 58 | 91,09 | 92,31 | 5,85 x 5 | 8H7 | 66 | 50 x 6 |
| 59 | 92,68 | 93,90 | 5,85 x 5 | 8H7 | 68 | 50 x 6 |
| 60 | 94,27 | 95,49 | 5,85 x 5 | 8H7 | 69 | 65 x 6 |
| 61 | 95,86 | 97,08 | 5,85 x 5 | 8H7 | 71 | 65 x 6 |
| 62 | 97,46 | 98,68 | 5,85 x 5 | 8H7 | 72 | 65 x 6 |
| 63 | 99,05 | 100,27 | 5,85 x 5 | 8H7 | 74 | 65 x 6 |
| 64 | 100,64 | 101,86 | 5,85 x 5 | 8H7 | 76 | 65 x 6 |
| 65 | 102,23 | 103,45 | 5,85 x 5 | 8H7 | 77 | 65 x 6 |
| 66 | 103,89 | 105,04 | 5,85 x 5 | 8H7 | 79 | 65 x 6 |
| 67 | 105,41 | 106,63 | 5,85 x 5 | 8H7 | 80 | 65 x 6 |
| 68 | 107,01 | 108,23 | 5,85 x 5 | 8H7 | 82 | 65 x 6 |
| 69 | 108,60 | 109,82 | 5,85 x 5 | 8H7 | 84 | 65 x 6 |
| 70 | 110,19 | 111,41 | 5,85 x 5 | 8H7 | 85 | 65 x 6 |
| 71 | 111,78 | 113,00 | 5,85 x 5 | 8H7 | 87 | 65 x 6 |
| 72 | 113,37 | 114,59 | 5,85 x 5 | 8H7 | 88 | 80 x 6 |
| 73 | 114,96 | 116,18 | 5,85 x 5 | 10H7 | 90 | 80 x 6 |
| 74 | 116,55 | 117,77 | 5,85 x 5 | 10H7 | 92 | 80 x 6 |
| 75 | 118,15 | 119,37 | 5,85 x 5 | 10H7 | 93 | 80 x 6 |
| 76 | 119,74 | 120,96 | 5,85 x 5 | 10H7 | 95 | 80 x 6 |
| 77 | 121,33 | 122,55 | 5,85 x 5 | 10H7 | 96 | 80 x 6 |
| 78 | 122,92 | 124,14 | 5,85 x 5 | 10H7 | 98 | 80 x 6 |
| 79 | 124,51 | 125,73 | 5,85 x 5 | 10H7 | 100 | 80 x 6 |
| 80 | 126,10 | 127,32 | 5,85 x 5 | 10H7 | 101 | 80 x 6 |
| 81 | 127,70 | 128,92 | 5,85 x 5 | 10H7 | 103 | 80 x 6 |
| 82 | 129,29 | 130,51 | 5,85 x 5 | 10H7 | 104 | 80 x 6 |
| 83 | 130,88 | 132,1 | 5,85 x 5 | 10H7 | 106 | 80 x 6 |
| 84 | 132,47 | 133,69 | 5,85 x 5 | 10H7 | 107 | 80 x 6 |
| 85 | 134,06 | 135,28 | 5,85 x 5 | 10H7 | 109 | 80 x 6 |
| 86 | 135,65 | 136,87 | 5,85 x 5 | 10H7 | 111 | 80 x 6 |
| 87 | 137,24 | 138,46 | 5,85 x 5 | 10H7 | 112 | 80 x 6 |
| 88 | 138,84 | 140,06 | 5,85 x 5 | 10H7 | 114 | 80 x 6 |

| z | dk (mm) | do (mm) | ed (BxH) (mm) | dv (mm) | dmax (mm) | Hub (BxH) (mm) |
|---|---|---|---|---|---|---|
| 89 | 140,43 | 141,65 | 5,85 x 5 | 10H7 | 115 | 80 x 6 |
| 90 | 142,02 | 143,24 | 5,85 x 5 | 10H7 | 117 | 80 x 6 |
| 91 | 143,61 | 144,83 | 5,85 x 5 | 10H7 | 119 | 90 x 6 |
| 92 | 145,20 | 146,42 | 5,85 x 5 | 10H7 | 120 | 90 x 6 |
| 93 | 146,79 | 148,01 | 5,85 x 5 | 10H7 | 122 | 90 x 6 |
| 94 | 148,39 | 149,61 | 5,85 x 5 | 10H7 | 123 | 90 x 6 |
| 95 | 149,98 | 151,2 | 5,85 x 5 | 10H7 | 125 | 90 x 6 |
| 96 | 151,57 | 152,79 | 5,85 x 5 | 10H7 | 127 | 90 x 6 |
| 97 | 153,16 | 154,38 | 5,85 x 5 | 10H7 | 128 | 90 x 6 |
| 98 | 154,75 | 155,97 | 5,85 x 5 | 10H7 | 130 | 90 x 6 |
| 99 | 156,34 | 157,56 | 5,85 x 5 | 10H7 | 131 | 90 x 6 |
| 100 | 157,93 | 159,15 | 5,85 x 5 | 10H7 | 133 | 90 x 6 |
| 101 | 159,53 | 160,75 | 5,85 x 5 | 12H7 | 135 | 95 x 6 |
| 102 | 161,12 | 162,34 | 5,85 x 5 | 12H7 | 136 | 95 x 6 |
| 103 | 162,71 | 163,93 | 5,85 x 5 | 12H7 | 138 | 95 x 6 |
| 104 | 164,30 | 165,52 | 5,85 x 5 | 12H7 | 139 | 95 x 6 |
| 105 | 165,89 | 167,11 | 5,85 x 5 | 12H7 | 141 | 95 x 6 |
| 106 | 167,48 | 168,7 | 5,85 x 5 | 12H7 | 142 | 95 x 6 |
| 107 | 169,08 | 170,3 | 5,85 x 5 | 12H7 | 144 | 95 x 6 |
| 108 | 170,67 | 171,89 | 5,85 x 5 | 12H7 | 146 | 95 x 6 |
| 109 | 172,26 | 173,48 | 5,85 x 5 | 12H7 | 147 | 110 x 6 |
| 110 | 173,85 | 175,07 | 5,85 x 5 | 12H7 | 149 | 110 x 6 |
| 111 | 175,44 | 176,66 | 5,85 x 5 | 12H7 | 150 | 110 x 6 |
| 112 | 177,03 | 178,25 | 5,85 x 5 | 12H7 | 152 | 110 x 6 |
| 113 | 178,63 | 179,85 | 5,85 x 5 | 12H7 | 154 | 110 x 6 |
| 114 | 180,22 | 181,44 | 5,85 x 5 | 12H7 | 155 | 110 x 6 |

## Synchronising pulleys easy drive® for cylindrical bore AT-profile

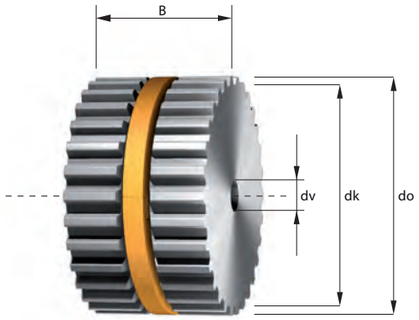


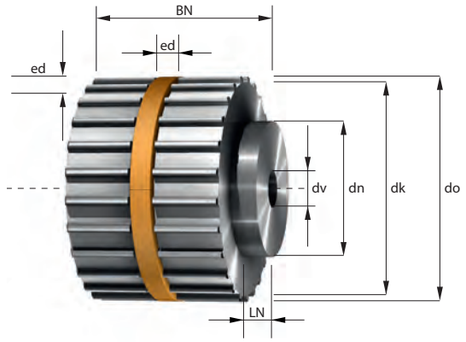


z = Number of teeth
dk = Outside diameter
do = Pitch diameter
ed = easy drive® groove
dv = Diameter of pre-bore
dmax = max. bore diameter without feather key groove
dh = Hub diameter
wh = Hub width

Min. diameter of the tension rollers without contra-flexure 50 mm, with contra-flexure 120 mm.

| Belt width | = b (mm) | 16 | 25 | 32 | 50 | 75 | 100 | 150 |
|---|---|---|---|---|---|---|---|---|
| Total width | = B (mm) | 18 | 27 | 34 | 52 | 77 | 102 | 152 |
| Total width with hub | = BN (mm) | 28 | 37 | 44 | 62 | 87 | 112 | 162 |

Other widths and larger sizes are available.

### AT 10

| z | dk (mm) | do (mm) | ed (BxH) (mm) | dv (mm) | dmax (mm) | Hub (BxH) (mm) |
|---|---|---|---|---|---|---|
| 12 | 36,35 | 38,35 | 5,85 x 5 | 6H7 | 14 | 28 x 10 |
| 13 | 39,55 | 41,38 | 5,85 x 5 | 8H7 | 15 | 32 x 10 |
| 14 | 42,70 | 44,70 | 5,85 x 5 | 8H7 | 17 | 32 x 10 |
| 15 | 45,93 | 47,75 | 5,85 x 5 | 8H7 | 20 | 32 x 10 |
| 16 | 49,11 | 50,93 | 5,85 x 5 | 8H7 | 23 | 35 x 10 |
| 17 | 52,29 | 54,11 | 5,85 x 5 | 8H7 | 26 | 40 x 10 |
| 18 | 55,48 | 57,30 | 5,85 x 5 | 8/10H7 | 27 | 40 x 10 |
| 19 | 58,66 | 60,48 | 5,85 x 5 | 8/10H7 | 29 | 44 x 10 |
| 20 | 61,84 | 63,66 | 5,85 x 5 | 12H7 | 36 | 46 x 10 |
| 21 | 65,03 | 66,85 | 5,85 x 5 | 12H7 | 39 | 46 x 10 |
| 22 | 68,21 | 70,03 | 5,85 x 5 | 12H7 | 42 | 50 x 10 |
| 23 | 71,39 | 73,21 | 5,85 x 5 | 12H7 | 45 | 50 x 10 |
| 24 | 74,57 | 76,39 | 5,85 x 5 | 12H7 | 49 | 58 x 10 |
| 25 | 77,77 | 79,58 | 5,85 x 5 | 12H7 | 52 | 60 x 10 |
| 26 | 80,94 | 82,76 | 5,85 x 5 | 12H7 | 55 | 60 x 10 |

| z | dk (mm) | do (mm) | ed (BxH) (mm) | dv (mm) | dmax (mm) | Hub (BxH) (mm) |
|---|---|---|---|---|---|---|
| 27 | 84,12 | 85,94 | 5,85 x 5 | 12H7 | 58 | 60 x 10 |
| 28 | 87,31 | 89,13 | 5,85 x 5 | 12H7 | 61 | 60 x 10 |
| 29 | 90,49 | 92,31 | 5,85 x 5 | 12H7 | 64 | 60 x 10 |
| 30 | 93,67 | 95,49 | 5,85 x 5 | 12H7 | 68 | 60 x 10 |
| 31 | 96,86 | 98,68 | 5,85 x 5 | 12H7 | 71 | 60 x 10 |
| 32 | 100,04 | 101,86 | 5,85 x 5 | 12H7 | 74 | 65 x 10 |
| 33 | 103,22 | 105,04 | 5,85 x 5 | 12H7 | 77 | 65 x 10 |
| 34 | 106,41 | 108,23 | 5,85 x 5 | 12H7 | 80 | 65 x 10 |
| 35 | 109,59 | 111,41 | 5,85 x 5 | 16H7 | 84 | 65 x 10 |
| 36 | 112,77 | 114,59 | 5,85 x 5 | 16H7 | 87 | 70 x 10 |
| 37 | 115,95 | 117,77 | 5,85 x 5 | 16H7 | 90 | 70 x 10 |
| 38 | 119,14 | 120,96 | 5,85 x 5 | 16H7 | 93 | 70 x 10 |
| 39 | 122,32 | 124,14 | 5,85 x 5 | 16H7 | 96 | 70 x 10 |
| 40 | 125,50 | 127,32 | 5,85 x 5 | 16H7 | 99 | 80 x 10 |
| 41 | 128,69 | 130,51 | 5,85 x 5 | 16H7 | 102 | 80 x 10 |

= Standard ring sizes in stock
= Stock-pulleys in width 27 mm, 34 mm + 52 mm

### AT 10

| z | dk (mm) | do (mm) | ed (BxH) (mm) | dv (mm) | dmax (mm) | Hub (BxH) (mm) |
|---|---|---|---|---|---|---|
| 42 | 131,82 | 133,69 | 5,85 x 5 | 16H7 | 105 | 80 x 10 |
| 43 | 134,12 | 136,87 | 5,85 x 5 | 16H7 | 108 | 80 x 10 |
| 44 | 138,24 | 140,06 | 5,85 x 5 | 16H7 | 112 | 90 x 10 |
| 45 | 141,42 | 143,24 | 5,85 x 5 | 16H7 | 115 | 90 x 10 |
| 46 | 144,60 | 146,42 | 5,85 x 5 | 16H7 | 120 | 90 x 10 |
| 47 | 147,79 | 149,61 | 5,85 x 5 | 16H7 | 122 | 90 x 10 |
| 48 | 150,92 | 152,79 | 5,85 x 5 | 16H7 | 125 | 95 x 10 |
| 49 | 154,15 | 155,97 | 5,85 x 5 | 16H7 | 128 | 95 x 10 |
| 50 | 157,33 | 159,15 | 5,85 x 5 | 16H7 | 127 | 95 x 10 |
| 51 | 160,52 | 162,34 | 5,85 x 5 | 16H7 | 131 | 95 x 10 |
| 52 | 163,70 | 165,52 | 5,85 x 5 | 16H7 | 134 | 110 x 10 |
| 53 | 166,88 | 168,70 | 5,85 x 5 | 16H7 | 137 | 110 x 10 |
| 54 | 170,07 | 171,89 | 5,85 x 5 | 16H7 | 140 | 110 x 10 |
| 55 | 173,25 | 175,07 | 5,85 x 5 | 16H7 | 143 | 110 x 10 |
| 56 | 176,43 | 178,25 | 5,85 x 5 | 16H7 | 146 | 110 x 10 |
| 57 | 179,62 | 181,44 | 5,85 x 5 | 16H7 | 150 | 110 x 10 |
| 58 | 182,80 | 184,62 | 5,85 x 5 | 16H7 | 153 | 110 x 10 |
| 59 | 185,98 | 187,80 | 5,85 x 5 | 16H7 | 156 | 110 x 10 |
| 60 | 189,17 | 190,99 | 5,85 x 5 | 16H7 | 159 | 110 x 10 |
| 61 | 192,35 | 194,17 | 5,85 x 5 | 16H7 | 162 | 110 x 10 |
| 62 | 195,53 | 197,35 | 5,85 x 5 | 16H7 | 166 | 110 x 10 |
| 63 | 198,72 | 200,54 | 5,85 x 5 | 16H7 | 169 | 140 x 10 |
| 64 | 201,90 | 203,72 | 5,85 x 5 | 16H7 | 172 | 140 x 10 |
| 65 | 205,08 | 206,90 | 5,85 x 5 | 16H7 | 175 | 140 x 10 |
| 66 | 208,26 | 210,08 | 5,85 x 5 | 16H7 | 178 | 140 x 10 |
| 67 | 211,45 | 213,27 | 5,85 x 5 | 16H7 | 181 | 140 x 10 |
| 68 | 214,63 | 216,45 | 5,85 x 5 | 16H7 | 185 | 140 x 10 |
| 69 | 217,81 | 219,63 | 5,85 x 5 | 16H7 | 188 | 140 x 10 |
| 70 | 221,00 | 222,82 | 5,85 x 5 | 16H7 | 191 | 140 x 10 |
| 71 | 224,18 | 226,00 | 5,85 x 5 | 16H7 | 194 | 140 x 10 |
| 72 | 227,36 | 229,18 | 5,85 x 5 | 20H7 | 197 | 140 x 10 |
| 73 | 230,55 | 232,37 | 5,85 x 5 | 20H7 | 201 | 140 x 10 |
| 74 | 233,79 | 235,55 | 5,85 x 5 | 20H7 | 204 | 140 x 10 |
| 75 | 236,91 | 238,73 | 5,85 x 5 | 20H7 | 207 | 140 x 10 |
| 76 | 240,10 | 241,92 | 5,85 x 5 | 20H7 | 210 | 140 x 10 |
| 77 | 243,28 | 245,10 | 5,85 x 5 | 20H7 | 213 | 160 x 10 |
| 78 | 246,46 | 248,28 | 5,85 x 5 | 20H7 | 216 | 160 x 10 |
| 79 | 249,64 | 251,46 | 5,85 x 5 | 20H7 | 218 | 160 x 10 |
| 80 | 252,83 | 254,65 | 5,85 x 5 | 20H7 | 218 | 160 x 10 |
| 81 | 256,01 | 257,83 | 5,85 x 5 | 20H7 | 221 | 160 x 10 |
| 82 | 259,19 | 261,01 | 5,85 x 5 | 20H7 | 224 | 160 x 10 |
| 83 | 262,38 | 264,20 | 5,85 x 5 | 20H7 | 227 | 160 x 10 |
| 84 | 265,38 | 267,38 | 5,85 x 5 | 20H7 | 230 | 160 x 10 |
| 85 | 268,74 | 270,56 | 5,85 x 5 | 20H7 | 234 | 160 x 10 |
| 86 | 271,93 | 273,75 | 5,85 x 5 | 20H7 | 237 | 160 x 10 |

| z | dk (mm) | do (mm) | ed (BxH) (mm) | dv (mm) | dmax (mm) | Hub (BxH) (mm) |
|---|---|---|---|---|---|---|
| 87 | 275,11 | 276,93 | 5,85 x 5 | 20H7 | 240 | 160 x 10 |
| 88 | 278,29 | 280,11 | 5,85 x 5 | 20H7 | 243 | 160 x 10 |
| 89 | 281,48 | 283,30 | 5,85 x 5 | 20H7 | 246 | 160 x 10 |
| 90 | 284,66 | 286,48 | 5,85 x 5 | 20H7 | 250 | 160 x 10 |
| 91 | 287,84 | 289,66 | 5,85 x 5 | 20H7 | 253 | 160 x 10 |
| 92 | 291,03 | 292,85 | 5,85 x 5 | 20H7 | 256 | 160 x 10 |
| 93 | 294,21 | 296,03 | 5,85 x 5 | 20H7 | 259 | 160 x 10 |
| 94 | 297,39 | 299,21 | 5,85 x 5 | 20H7 | 262 | 160 x 10 |
| 95 | 300,57 | 302,39 | 5,85 x 5 | 24H7 | 266 | 160 x 10 |
| 96 | 303,76 | 305,58 | 5,85 x 5 | 24H7 | 269 | 180 x 10 |
| 97 | 306,94 | 308,76 | 5,85 x 5 | 24H7 | 272 | 180 x 10 |
| 98 | 310,12 | 311,94 | 5,85 x 5 | 24H7 | 275 | 180 x 10 |
| 99 | 313,31 | 315,13 | 5,85 x 5 | 24H7 | 278 | 180 x 10 |
| 100 | 316,49 | 318,31 | 5,85 x 5 | 24H7 | 281 | 180 x 10 |
| 101 | 319,67 | 321,49 | 5,85 x 5 | 24H7 | 285 | 180 x 10 |
| 102 | 322,86 | 324,68 | 5,85 x 5 | 24H7 | 288 | 180 x 10 |
| 103 | 326,04 | 327,86 | 5,85 x 5 | 24H7 | 291 | 180 x 10 |
| 104 | 329,22 | 331,04 | 5,85 x 5 | 24H7 | 294 | 180 x 10 |
| 105 | 332,41 | 334,23 | 5,85 x 5 | 24H7 | 297 | 180 x 10 |
| 106 | 335,59 | 337,41 | 5,85 x 5 | 24H7 | 301 | 180 x 10 |
| 107 | 338,77 | 340,59 | 5,85 x 5 | 24H7 | 304 | 180 x 10 |
| 108 | 341,95 | 343,77 | 5,85 x 5 | 24H7 | 307 | 180 x 10 |
| 109 | 345,14 | 346,96 | 5,85 x 5 | 24H7 | 310 | 180 x 10 |
| 110 | 348,32 | 350,14 | 5,85 x 5 | 24H7 | 313 | 180 x 10 |
| 111 | 351,50 | 353,32 | 5,85 x 5 | 24H7 | 317 | 180 x 10 |
| 112 | 354,69 | 356,51 | 5,85 x 5 | 24H7 | 320 | 180 x 10 |
| 113 | 357,87 | 359,69 | 5,85 x 5 | 24H7 | 323 | 180 x 10 |
| 114 | 361,05 | 362,87 | 5,85 x 5 | 24H7 | 326 | 180 x 10 |

## Synchronising pulleys easy drive® for cylindrical bore AT-profile

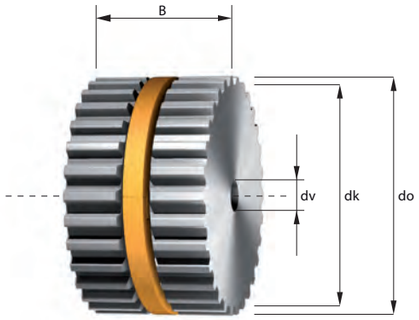


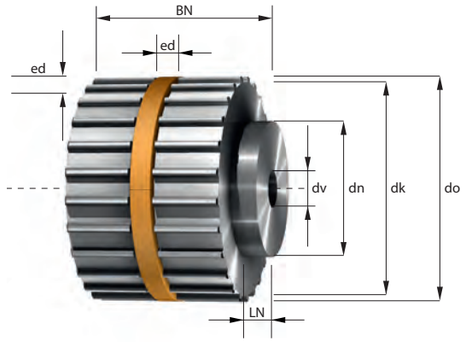


z = Number of teeth
dk = Outside diameter
do = Pitch diameter
ed = easy drive® groove
dv = Diameter of pre-bore
dmax = max. bore diameter without feather key groove
dh = Hub diameter
wh = Hub width

Min. diameter of the tension rollers without contra-flexure 120 mm, with contra-flexure 180 mm.

| | | | | | | | | |
|---|---|---|---|---|---|---|---|---|
| Belt width | = b (mm) | 16 | 25 | 32 | 50 | 75 | 100 | 125 | 150 |
| Total width | = B (mm) | 18 | 27 | 34 | 52 | 77 | 102 | 127 | 152 |
| Total width with hub | = BN (mm) | 28 | 37 | 44 | 62 | 87 | 112 | 137 | 162 |

Other widths and larger sizes are available.

### AT 20

| z | dk (mm) | do (mm) | ed (BxH) (mm) | dv (mm) | dmax (mm) | Hub (BxH) (mm) |
|---|---|---|---|---|---|---|
| 18 | 111,77 | 114,59 | * | 12H7 | 82 | 70 x 10 |
| 19 | 118,14 | 120,96 | * | 12H7 | 88 | 80 x 10 |
| 20 | 124,50 | 127,32 | * | 16H7 | 95 | 90 x 10 |
| 21 | 130,87 | 133,69 | * | 16H7 | 101 | 90 x 10 |
| 22 | 137,24 | 140,06 | * | 16H7 | 107 | 90 x 10 |
| 23 | 143,60 | 146,42 | * | 16H7 | 114 | 90 x 10 |
| 24 | 149,97 | 152,79 | * | 16H7 | 120 | 95 x 10 |
| 25 | 156,33 | 159,15 | * | 16H7 | 126 | 95 x 10 |
| 26 | 162,70 | 165,52 | * | 16H7 | 133 | 95 x 10 |
| 27 | 169,07 | 171,89 | * | 16H7 | 139 | 110 x 10 |
| 28 | 175,43 | 178,25 | * | 16H7 | 145 | 110 x 10 |
| 29 | 181,80 | 184,62 | * | 16H7 | 152 | 110 x 10 |
| 30 | 188,17 | 190,99 | * | 16H7 | 158 | 110 x 10 |
| 31 | 194,53 | 197,35 | * | 16H7 | 165 | 110 x 10 |
| 32 | 200,90 | 203,72 | * | 16H7 | 171 | 110 x 10 |

| z | dk (mm) | do (mm) | ed (BxH) (mm) | dv (mm) | dmax (mm) | Hub (BxH) (mm) |
|---|---|---|---|---|---|---|
| 33 | 207,26 | 210,08 | * | 16H7 | 177 | 110 x 10 |
| 34 | 213,63 | 216,45 | * | 16H7 | 184 | 110 x 10 |
| 35 | 220,00 | 222,82 | * | 16H7 | 190 | 110 x 10 |
| 36 | 226,36 | 229,18 | * | 18H7 | 196 | 110 x 10 |
| 37 | 232,73 | 235,55 | * | 18H7 | 203 | 110 x 10 |
| 38 | 239,10 | 241,92 | * | 18H7 | 209 | 110 x 10 |
| 39 | 245,46 | 248,28 | * | 18H7 | 215 | 110 x 10 |
| 40 | 251,83 | 254,65 | * | 18H7 | 222 | 110 x 10 |
| 41 | 258,19 | 261,01 | * | 18H7 | 228 | 130 x 10 |
| 42 | 264,56 | 267,38 | * | 18H7 | 235 | 130 x 10 |
| 43 | 270,93 | 273,75 | * | 18H7 | 241 | 130 x 10 |
| 44 | 277,29 | 280,11 | * | 18H7 | 247 | 130 x 10 |
| 45 | 283,66 | 286,48 | * | 18H7 | 254 | 130 x 10 |
| 46 | 290,03 | 292,85 | * | 18H7 | 260 | 130 x 10 |
| 47 | 296,39 | 299,21 | * | 18H7 | 266 | 130 x 10 |

* On request

### AT 20

| z | dk (mm) | do (mm) | ed (BxH) (mm) | dv (mm) | dmax (mm) | Hub (BxH) (mm) |
|---|---|---|---|---|---|---|
| 48 | 302,76 | 305,58 | * | 18H7 | 273 | 130 x 10 |
| 49 | 309,12 | 311,94 | * | 20H7 | 279 | 140 x 10 |
| 50 | 315,49 | 318,31 | * | 20H7 | 285 | 140 x 10 |
| 51 | 321,86 | 324,68 | * | 20H7 | 292 | 140 x 10 |
| 52 | 328,22 | 331,04 | * | 20H7 | 298 | 140 x 10 |
| 53 | 334,59 | 337,41 | * | 20H7 | 305 | 140 x 10 |
| 54 | 340,95 | 343,77 | * | 20H7 | 311 | 140 x 10 |
| 55 | 347,32 | 350,14 | * | 20H7 | 317 | 140 x 10 |
| 56 | 353,69 | 356,51 | * | 20H7 | 324 | 140 x 10 |
| 57 | 360,05 | 362,87 | * | 20H7 | 330 | 140 x 10 |
| 58 | 366,42 | 369,24 | * | 20H7 | 336 | 140 x 10 |
| 59 | 372,79 | 375,61 | * | 20H7 | 343 | 140 x 10 |
| 60 | 379,15 | 381,97 | * | 20H7 | 349 | 140 x 10 |
| 61 | 385,52 | 388,34 | * | 20H7 | 356 | 140 x 10 |
| 62 | 391,88 | 394,70 | * | 20H7 | 362 | 140 x 10 |
| 63 | 398,25 | 401,07 | * | 20H7 | 368 | 140 x 10 |
| 64 | 404,62 | 407,44 | * | 20H7 | 375 | 140 x 10 |
| 65 | 410,98 | 413,80 | * | 20H7 | 381 | 140 x 10 |
| 66 | 417,35 | 420,17 | * | 20H7 | 387 | 140 x 10 |
| 67 | 423,72 | 426,54 | * | 20H7 | 394 | 140 x 10 |
| 68 | 430,08 | 432,90 | * | 20H7 | 400 | 140 x 10 |
| 69 | 436,45 | 439,27 | * | 20H7 | 406 | 140 x 10 |
| 70 | 442,81 | 445,63 | * | 20H7 | 413 | 140 x 10 |
| 71 | 449,18 | 452,00 | * | 20H7 | 419 | 140 x 10 |
| 72 | 455,55 | 458,37 | * | 20H7 | 426 | 140 x 10 |
| 73 | 461,91 | 464,73 | * | 30H7 | 432 | 160 x 10 |
| 74 | 468,28 | 471,10 | * | 30H7 | 438 | 160 x 10 |
| 75 | 474,64 | 477,46 | * | 30H7 | 445 | 160 x 10 |
| 76 | 481,01 | 483,83 | * | 30H7 | 451 | 160 x 10 |
| 77 | 487,38 | 490,20 | * | 30H7 | 457 | 160 x 10 |
| 78 | 493,74 | 496,56 | * | 30H7 | 464 | 160 x 10 |
| 79 | 500,11 | 502,93 | * | 30H7 | 470 | 160 x 10 |
| 80 | 506,48 | 509,30 | * | 30H7 | 471 | 200 x 10 |
| 81 | 512,84 | 515,66 | * | 30H7 | 478 | 200 x 10 |
| 82 | 519,21 | 522,03 | * | 30H7 | 484 | 200 x 10 |
| 83 | 525,57 | 528,39 | * | 30H7 | 491 | 200 x 10 |
| 84 | 531,94 | 534,76 | * | 30H7 | 497 | 200 x 10 |
| 85 | 538,31 | 541,13 | * | 30H7 | 503 | 200 x 10 |
| 86 | 544,67 | 547,49 | * | 30H7 | 510 | 200 x 10 |
| 87 | 551,04 | 553,86 | * | 30H7 | 516 | 200 x 10 |
| 88 | 557,41 | 560,23 | * | 30H7 | 522 | 200 x 10 |
| 89 | 563,77 | 566,59 | * | 30H7 | 529 | 200 x 10 |
| 90 | 570,14 | 572,96 | * | 30H7 | 535 | 200 x 10 |
| 91 | 576,50 | 579,32 | * | 30H7 | 542 | 200 x 10 |
| 92 | 582,87 | 585,69 | * | 30H7 | 548 | 200 x 10 |

| z | dk (mm) | do (mm) | ed (BxH) (mm) | dv (mm) | dmax (mm) | Hub (BxH) (mm) |
|---|---|---|---|---|---|---|
| 93 | 589,24 | 592,06 | * | 30H7 | 554 | 200 x 10 |
| 94 | 595,60 | 598,42 | * | 30H7 | 561 | 200 x 10 |
| 95 | 601,97 | 604,79 | * | 40H7 | 567 | 200 x 10 |
| 96 | 608,33 | 611,15 | * | 40H7 | 573 | 200 x 10 |
| 97 | 614,70 | 617,52 | * | 40H7 | 580 | 200 x 10 |
| 98 | 621,07 | 623,89 | * | 40H7 | 586 | 200 x 10 |
| 99 | 627,43 | 630,25 | * | 40H7 | 592 | 200 x 10 |
| 100 | 633,80 | 636,62 | * | 40H7 | 599 | 200 x 10 |
| 101 | 640,17 | 642,99 | * | 40H7 | 605 | 200 x 10 |
| 102 | 646,53 | 649,35 | * | 40H7 | 612 | 200 x 10 |
| 103 | 652,90 | 655,72 | * | 40H7 | 618 | 200 x 10 |
| 104 | 659,26 | 662,08 | * | 40H7 | 624 | 200 x 10 |
| 105 | 665,63 | 668,45 | * | 40H7 | 631 | 200 x 10 |
| 106 | 672,00 | 674,82 | * | 40H7 | 637 | 200 x 10 |
| 107 | 678,36 | 681,18 | * | 40H7 | 643 | 200 x 10 |
| 108 | 684,73 | 687,55 | * | 40H7 | 650 | 200 x 10 |
| 109 | 691,10 | 693,92 | * | 40H7 | 656 | 200 x 10 |
| 110 | 697,46 | 700,28 | * | 40H7 | 662 | 200 x 10 |
| 111 | 703,83 | 706,65 | * | 40H7 | 669 | 200 x 10 |
| 112 | 710,19 | 713,01 | * | 40H7 | 675 | 200 x 10 |
| 113 | 716,56 | 719,38 | * | 40H7 | 682 | 200 x 10 |
| 114 | 722,93 | 725,75 | * | 40H7 | 688 | 200 x 10 |

## Synchronising pulleys easy drive® for cylindrical bore HTD-profile

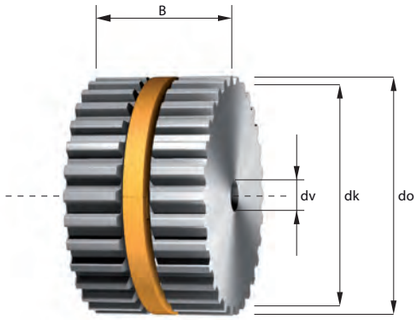


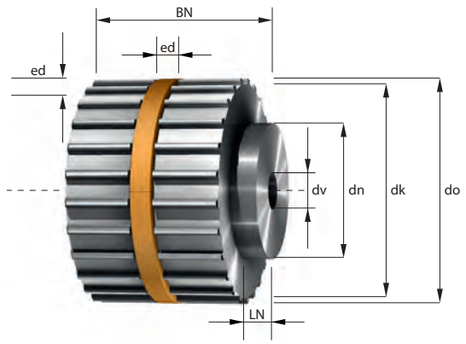


z = Number of teeth
dk = Outside diameter
do = Pitch diameter
ed = easy drive® groove
dv = Diameter of pre-bore
dmax = max. bore diameter without feather key groove
dh = Hub diameter
wh = Hub width

Min. diameter of the tension rollers without contra-flexure 20 mm, with contra-flexure 20 mm.

| | | | | | | |
|---|---|---|---|---|---|---|
| Belt width | = b (mm) | 15 | 20 | 25 | 30 | 50 |
| Total width | = B (mm) | 17 | 22 | 27 | 32 | 52 |
| Total width with hub | = BN (mm) | B + 6,5/10,0 mm | | | | |

Other widths and larger sizes are available.

### HTD3M

| z | dk (mm) | do (mm) | ed (BxH) (mm) | dv (mm) | dmax (mm) | Hub (BxH) (mm) |
|---|---|---|---|---|---|---|
| 23 | 21,20 | 21,96 | 5,85 x 4 | 0 | 6 | 13 x 6,5 |
| 24 | 22,16 | 22,92 | 5,85 x 4 | 0 | 7 | 13 x 6,5 |
| 25 | 23,11 | 23,87 | 5,85 x 4 | 0 | 8 | 13 x 6,5 |
| 26 | 24,07 | 24,83 | 5,85 x 4 | 0 | 9 | 16 x 6,5 |
| 27 | 25,02 | 25,78 | 5,85 x 4 | 0 | 9 | 16 x 6,5 |
| 28 | 25,98 | 26,74 | 5,85 x 4 | 0 | 10 | 18 x 6,5 |
| 29 | 26,93 | 27,69 | 5,85 x 4 | 0 | 10 | 18 x 6,5 |
| 30 | 27,89 | 28,65 | 5,85 x 4 | 0 | 12 | 20 x 6,5 |
| 31 | 28,84 | 29,60 | 5,85 x 4 | 0 | 12 | 20 x 6,5 |
| 32 | 29,80 | 30,56 | 5,85 x 4 | 0 | 13 | 22 x 6,5 |
| 33 | 30,75 | 31,51 | 5,85 x 5 | 0 | 10 | 22 x 6,5 |
| 34 | 31,71 | 32,47 | 5,85 x 5 | 0 | 11 | 22 x 6,5 |
| 35 | 32,66 | 33,42 | 5,85 x 5 | 0 | 12 | 22 x 6,5 |
| 36 | 33,62 | 34,38 | 5,85 x 5 | 0 | 13 | 26 x 10 |
| 37 | 34,57 | 35,33 | 5,85 x 5 | 0 | 14 | 26 x 10 |

| z | dk (mm) | do (mm) | ed (BxH) (mm) | dv (mm) | dmax (mm) | Hub (BxH) (mm) |
|---|---|---|---|---|---|---|
| 38 | 35,53 | 36,29 | 5,85 x 5 | 0 | 15 | 26 x 10 |
| 39 | 36,48 | 37,24 | 5,85 x 5 | 0 | 16 | 26 x 10 |
| 40 | 37,44 | 38,20 | 5,85 x 5 | 0 | 17 | 28 x 10 |
| 41 | 38,39 | 39,15 | 5,85 x 5 | 0 | 18 | 28 x 10 |
| 42 | 39,35 | 40,11 | 5,85 x 5 | 0 | 19 | 28 x 10 |
| 43 | 40,30 | 41,06 | 5,85 x 5 | 0 | 20 | 28 x 10 |
| 44 | 41,26 | 42,02 | 5,85 x 5 | 0 | 21 | 33 x 10 |
| 45 | 42,21 | 42,97 | 5,85 x 5 | 8 | 22 | 33 x 10 |
| 46 | 43,17 | 43,93 | 5,85 x 5 | 8 | 22 | 33 x 10 |
| 47 | 44,12 | 44,88 | 5,85 x 5 | 8 | 22 | 33 x 10 |
| 48 | 45,08 | 45,84 | 5,85 x 5 | 8 | 23 | 33 x 10 |
| 49 | 46,03 | 46,79 | 5,85 x 5 | 8 | 24 | 33 x 10 |
| 50 | 46,99 | 47,75 | 5,85 x 5 | 8 | 24 | 33 x 10 |
| 51 | 47,94 | 48,70 | 5,85 x 5 | 8 | 25 | 33 x 10 |
| 52 | 48,90 | 49,66 | 5,85 x 5 | 8 | 25 | 33 x 10 |

= Standard ring sizes in stock



### HTD3M

| z | dk (mm) | do (mm) | ed (BxH) (mm) | dv (mm) | dmax (mm) | Hub (BxH) (mm) |
|---|---|---|---|---|---|---|
| 53 | 49,85 | 50,61 | 5,85 x 5 | 8 | 26 | 33 x 10 |
| 54 | 50,81 | 51,57 | 5,85 x 5 | 8 | 26 | 33 x 10 |
| 55 | 51,75 | 52,52 | 5,85 x 5 | 8 | 27 | 33 x 10 |
| 56 | 52,72 | 53,48 | 5,85 x 5 | 8 | 28 | 33 x 10 |
| 57 | 53,67 | 54,43 | 5,85 x 5 | 8 | 29 | 33 x 10 |
| 58 | 54,63 | 55,39 | 5,85 x 5 | 8 | 30 | 33 x 10 |
| 59 | 55,58 | 56,34 | 5,85 x 5 | 8 | 31 | 33 x 10 |
| 60 | 56,54 | 57,30 | 5,85 x 5 | 8 | 32 | 33 x 10 |
| 61 | 57,49 | 58,25 | 5,85 x 5 | 8 | 33 | 33 x 10 |
| 62 | 58,45 | 59,21 | 5,85 x 5 | 8 | 34 | 33 x 10 |
| 63 | 59,40 | 60,16 | 5,85 x 5 | 8 | 35 | 33 x 10 |
| 64 | 60,36 | 61,12 | 5,85 x 5 | 8 | 36 | 33 x 10 |
| 65 | 61,31 | 62,07 | 5,85 x 5 | 8 | 37 | 33 x 10 |
| 66 | 62,27 | 63,03 | 5,85 x 5 | 8 | 38 | 33 x 10 |
| 67 | 63,22 | 63,98 | 5,85 x 5 | 8 | 39 | 33 x 10 |
| 68 | 64,18 | 64,94 | 5,85 x 5 | 8 | 40 | 33 x 10 |
| 69 | 65,13 | 65,89 | 5,85 x 5 | 8 | 41 | 33 x 10 |
| 70 | 66,09 | 66,85 | 5,85 x 5 | 8 | 42 | 33 x 10 |
| 71 | 67,04 | 67,80 | 5,85 x 5 | 8 | 43 | 33 x 10 |
| 72 | 67,99 | 68,75 | 5,85 x 5 | 8 | 43 | 33 x 10 |
| 73 | 68,95 | 69,71 | 5,85 x 5 | 8 | 44 | |
| 74 | 69,90 | 70,66 | 5,85 x 5 | 8 | 45 | |
| 75 | 70,86 | 71,62 | 5,85 x 5 | 8 | 46 | |
| 76 | 71,81 | 72,57 | 5,85 x 5 | 8 | 47 | |
| 77 | 72,77 | 73,53 | 5,85 x 5 | 8 | 48 | |
| 78 | 73,72 | 74,48 | 5,85 x 5 | 8 | 49 | |
| 79 | 74,68 | 75,44 | 5,85 x 5 | 8 | 50 | |
| 80 | 75,63 | 76,39 | 5,85 x 5 | 8 | 51 | |
| 81 | 76,59 | 77,35 | 5,85 x 5 | 8 | 52 | |
| 82 | 77,54 | 78,30 | 5,85 x 5 | 8 | 53 | |
| 83 | 78,50 | 79,26 | 5,85 x 5 | 8 | 54 | |
| 84 | 79,45 | 80,21 | 5,85 x 5 | 8 | 55 | |
| 85 | 80,41 | 81,17 | 5,85 x 5 | 8 | 56 | |
| 86 | 81,36 | 82,12 | 5,85 x 5 | 8 | 57 | |
| 87 | 82,32 | 83,08 | 5,85 x 5 | 8 | 58 | |
| 88 | 83,27 | 84,03 | 5,85 x 5 | 8 | 59 | |
| 89 | 84,23 | 84,99 | 5,85 x 5 | 8 | 60 | |
| 90 | 85,18 | 85,94 | 5,85 x 5 | 8 | 61 | |
| 91 | 86,14 | 86,90 | 5,85 x 5 | 8 | 62 | |
| 92 | 87,09 | 87,85 | 5,85 x 5 | 8 | 63 | |
| 93 | 88,05 | 88,81 | 5,85 x 5 | 8 | 64 | |
| 94 | 89,00 | 89,76 | 5,85 x 5 | 8 | 65 | |
| 95 | 89,96 | 90,72 | 5,85 x 5 | 8 | 65 | |
| 96 | 90,91 | 91,67 | 5,85 x 5 | 8 | 66 | |
| 97 | 91,87 | 92,63 | 5,85 x 5 | 8 | 67 | |

| z | dk (mm) | do (mm) | ed (BxH) (mm) | dv (mm) | dmax (mm) | Hub (BxH) (mm) |
|---|---|---|---|---|---|---|
| 98 | 92,82 | 93,59 | 5,85 x 5 | 8 | 68 | |
| 99 | 93,78 | 94,54 | 5,85 x 5 | 8 | 69 | |
| 100 | 94,73 | 95,49 | 5,85 x 5 | 8 | 70 | |
| 101 | 95,69 | 96,45 | 5,85 x 5 | 8 | 71 | |
| 102 | 96,64 | 97,40 | 5,85 x 5 | 8 | 72 | |
| 103 | 97,50 | 98,36 | 5,85 x 5 | 8 | 73 | |
| 104 | 98,55 | 99,31 | 5,85 x 5 | 8 | 74 | |
| 105 | 99,51 | 100,27 | 5,85 x 5 | 8 | 75 | |
| 106 | 100,46 | 101,22 | 5,85 x 5 | 8 | 76 | |
| 107 | 101,42 | 102,18 | 5,85 x 5 | 8 | 77 | |
| 108 | 102,37 | 103,13 | 5,85 x 5 | 8 | 78 | |
| 109 | 103,33 | 104,09 | 5,85 x 5 | 8 | 79 | |
| 110 | 104,28 | 105,04 | 5,85 x 5 | 8 | 80 | |
| 111 | 105,24 | 106,00 | 5,85 x 5 | 8 | 81 | |
| 112 | 106,19 | 106,95 | 5,85 x 5 | 8 | 82 | |
| 113 | 107,15 | 107,91 | 5,85 x 5 | 8 | 83 | |
| 114 | 108,10 | 108,86 | 5,85 x 5 | 8 | 84 | |
| 115 | 109,05 | 109,82 | 5,85 x 5 | 8 | 85 | |
| 116 | 110,01 | 110,77 | 5,85 x 5 | 8 | 86 | |
| 117 | 110,97 | 111,73 | 5,85 x 5 | 8 | 87 | |
| 118 | 111,92 | 112,68 | 5,85 x 5 | 8 | 88 | |
| 119 | 112,88 | 113,64 | 5,85 x 5 | 8 | 89 | |
| 120 | 113,83 | 114,59 | 5,85 x 5 | 8 | 89 | |
| 121 | 114,79 | 115,55 | 5,85 x 5 | 8 | 90 | |
| 122 | 115,74 | 116,50 | 5,85 x 5 | 8 | 91 | |
| 123 | 116,70 | 117,46 | 5,85 x 5 | 8 | 92 | |
| 124 | 117,65 | 118,41 | 5,85 x 5 | 8 | 93 | |

## Synchronising pulleys easy drive® for cylindrical bore HTD-profile

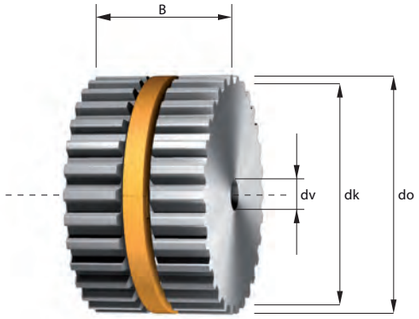


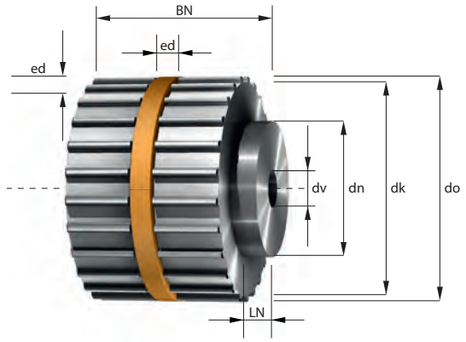


z = Number of teeth
dk = Outside diameter
do = Pitch diameter
ed = easy drive® groove
dv = Diameter of pre-bore
dmax = max. bore diameter without feather key groove
dh = Hub diameter
wh = Hub width

Min. diameter of the tension rollers without contra-flexure 30 mm, with contra-flexure 60 mm.

| Belt width | = b (mm) | 15 | 20 | 25 | 30 | 50 | 75 | 100 | 150 |
|---|---|---|---|---|---|---|---|---|---|
| Total width | = B (mm) | 17 | 22 | 27 | 32 | 52 | 77 | 102 | 152 |
| Total width with hub | = BN (mm) | B + 5,5/7,5/9,5 mm | | | | | | | |

Other widths and larger sizes are available.

### HTD5M

| z | dk (mm) | do (mm) | ed (BxH) (mm) | dv (mm) | dmax (mm) | Hub (BxH) (mm) |
|---|---|---|---|---|---|---|
| 14 | 21,14 | 22,28 | 5,85 x 4 | 6 | 6 | 13 x 5,5 |
| 15 | 22,73 | 23,87 | 5,85 x 4 | 6 | 7 | 16 x 5,5 |
| 16 | 24,32 | 25,46 | 5,85 x 4 | 6 | 9 | 16,5 x 5,5 |
| 17 | 25,92 | 27,05 | 5,85 x 4 | 6 | 10 | 20 x 5,5 |
| 18 | 27,51 | 28,65 | 5,85 x 4 | 6 | 12 | 20 x 5,5 |
| 19 | 29,10 | 30,24 | 5,85 x 4 | 6 | 13 | 20 x 5,5 |
| 20 | 30,69 | 31,83 | 5,85 x 5 | 6 | 10 | 23 x 5,5 |
| 21 | 32,28 | 33,42 | 5,85 x 5 | 6 | 12 | 24 x 5,5 |
| 22 | 33,87 | 35,01 | 5,85 x 5 | 6 | 13 | 25,5 x 5,5 |
| 23 | 35,47 | 36,61 | 5,85 x 5 | 6 | 15 | 25,5 x 5,5 |
| 24 | 37,06 | 38,20 | 5,85 x 5 | 6 | 17 | 27 x 7,5 |
| 25 | 38,65 | 39,79 | 5,85 x 5 | 6 | 18 | 27 x 7,5 |
| 26 | 40,24 | 41,38 | 5,85 x 5 | 6 | 20 | 30 x 7,5 |
| 27 | 41,83 | 42,97 | 5,85 x 5 | 6 | 21 | 30 x 7,5 |
| 28 | 43,42 | 44,56 | 5,85 x 5 | 6 | 22 | 30,5 x 7,5 |

| z | dk (mm) | do (mm) | ed (BxH) (mm) | dv (mm) | dmax (mm) | Hub (BxH) (mm) |
|---|---|---|---|---|---|---|
| 29 | 45,01 | 46,15 | 5,85 x 5 | 6 | 23 | 30,5 x 7,5 |
| 30 | 46,61 | 47,75 | 5,85 x 5 | 6 | 24 | 35 x 7,5 |
| 31 | 48,20 | 49,34 | 5,85 x 5 | 8 | 25 | 35 x 7,5 |
| 32 | 49,79 | 50,93 | 5,85 x 5 | 8 | 26 | 38 x 7,5 |
| 33 | 51,38 | 52,52 | 5,85 x 5 | 8 | 27 | 38 x 7,5 |
| 34 | 52,97 | 54,11 | 5,85 x 5 | 8 | 28 | 38 x 7,5 |
| 35 | 54,55 | 55,70 | 5,85 x 5 | 8 | 31 | 38 x 7,5 |
| 36 | 56,16 | 57,30 | 5,85 x 5 | 8 | 33 | 38 x 7,5 |
| 37 | 57,75 | 58,89 | 5,85 x 5 | 8 | 34 | 38 x 7,5 |
| 38 | 59,34 | 60,48 | 5,85 x 5 | 8 | 36 | 38 x 7,5 |
| 39 | 60,93 | 62,07 | 5,85 x 5 | 8 | 36 | 38 x 7,5 |
| 40 | 62,52 | 63,66 | 5,85 x 5 | 8 | 38 | 38 x 7,5 |
| 41 | 64,11 | 65,25 | 5,85 x 5 | 8 | 40 | 38 x 7,5 |
| 42 | 65,71 | 66,85 | 5,85 x 5 | 8 | 41 | 38 x 7,5 |
| 43 | 67,30 | 68,44 | 5,85 x 5 | 8 | 43 | 38 x 7,5 |

= Standard ring sizes in stock



### HTD5M

| z | dk (mm) | do (mm) | ed (BxH) (mm) | dv (mm) | dmax (mm) | Hub (BxH) (mm) |
|---|---|---|---|---|---|---|
| 44 | 68,89 | 70,03 | 5,85 x 5 | 8 | 44 | 38 x 9,5 |
| 45 | 70,48 | 71,62 | 5,85 x 5 | 8 | 46 | 38 x 9,5 |
| 46 | 72,07 | 73,21 | 5,85 x 5 | 8 | 48 | 38 x 9,5 |
| 47 | 73,66 | 74,80 | 5,85 x 5 | 8 | 49 | 38 x 9,5 |
| 48 | 75,25 | 76,39 | 5,85 x 5 | 8 | 51 | 45 x 9,5 |
| 49 | 76,85 | 77,99 | 5,85 x 5 | 8 | 52 | 45 x 9,5 |
| 50 | 78,44 | 79,58 | 5,85 x 5 | 8 | 54 | 45 x 9,5 |
| 51 | 80,03 | 81,17 | 5,85 x 5 | 8 | 56 | 45 x 9,5 |
| 52 | 81,62 | 82,76 | 5,85 x 5 | 8 | 57 | 45 x 9,5 |
| 53 | 83,21 | 84,35 | 5,85 x 5 | 8 | 59 | 45 x 9,5 |
| 54 | 84,80 | 85,94 | 5,85 x 5 | 8 | 60 | 45 x 9,5 |
| 55 | 86,40 | 87,54 | 5,85 x 5 | 8 | 62 | 45 x 9,5 |
| 56 | 87,99 | 89,13 | 5,85 x 5 | 8 | 63 | 45 x 9,5 |
| 57 | 89,58 | 90,72 | 5,85 x 5 | 8 | 65 | 45 x 9,5 |
| 58 | 91,17 | 92,31 | 5,85 x 5 | 8 | 67 | 45 x 9,5 |
| 59 | 92,76 | 93,90 | 5,85 x 5 | 8 | 68 | 45 x 9,5 |
| 60 | 94,35 | 95,49 | 5,85 x 5 | 8 | 70 | 45 x 9,5 |
| 61 | 95,94 | 97,08 | 5,85 x 5 | 8 | 71 | 45 x 9,5 |
| 62 | 97,54 | 98,68 | 5,85 x 5 | 8 | 73 | 45 x 9,5 |
| 63 | 99,13 | 100,27 | 5,85 x 5 | 8 | 75 | 45 x 9,5 |
| 64 | 100,72 | 101,86 | 5,85 x 5 | 8 | 76 | 45 x 9,5 |
| 65 | 102,31 | 103,45 | 5,85 x 5 | 8 | 78 | 45 x 9,5 |
| 66 | 103,90 | 105,04 | 5,85 x 5 | 8 | 79 | 45 x 9,5 |
| 67 | 105,49 | 106,63 | 5,85 x 5 | 8 | 81 | 45 x 9,5 |
| 68 | 107,05 | 108,23 | 5,85 x 5 | 8 | 83 | 45 x 9,5 |
| 69 | 108,68 | 109,82 | 5,85 x 5 | 8 | 84 | 45 x 9,5 |
| 70 | 110,27 | 111,41 | 5,85 x 5 | 8 | 86 | 45 x 9,5 |
| 71 | 111,86 | 113,00 | 5,85 x 5 | 8 | 87 | 45 x 9,5 |
| 72 | 113,45 | 114,59 | 5,85 x 5 | 8 | 89 | 45 x 9,5 |
| 73 | 115,04 | 116,18 | 5,85 x 5 | 8 | 91 | |
| 74 | 116,63 | 117,77 | 5,85 x 5 | 8 | 92 | |
| 75 | 118,23 | 119,37 | 5,85 x 5 | 8 | 94 | |
| 76 | 119,82 | 120,96 | 5,85 x 5 | 8 | 95 | |
| 77 | 121,41 | 122,55 | 5,85 x 5 | 8 | 97 | |
| 78 | 123,00 | 124,14 | 5,85 x 5 | 8 | 99 | |
| 79 | 124,59 | 125,73 | 5,85 x 5 | 8 | 100 | |
| 80 | 126,18 | 127,32 | 5,85 x 5 | 8 | 102 | |
| 81 | 127,78 | 128,92 | 5,85 x 5 | 8 | 103 | |
| 82 | 129,37 | 130,51 | 5,85 x 5 | 8 | 105 | |
| 83 | 130,96 | 132,10 | 5,85 x 5 | 8 | 106 | |
| 84 | 132,55 | 133,69 | 5,85 x 5 | 8 | 108 | |
| 85 | 134,14 | 135,28 | 5,85 x 5 | 8 | 110 | |
| 86 | 135,73 | 136,87 | 5,85 x 5 | 8 | 111 | |
| 87 | 137,32 | 138,46 | 5,85 x 5 | 8 | 113 | |
| 88 | 138,92 | 140,06 | 5,85 x 5 | 8 | 114 | |

| z | dk (mm) | do (mm) | ed (BxH) (mm) | dv (mm) | dmax (mm) | Hub (BxH) (mm) |
|---|---|---|---|---|---|---|
| 89 | 140,51 | 141,65 | 5,85 x 5 | 8 | 116 | |
| 90 | 142,10 | 143,24 | 5,85 x 5 | 8 | 118 | |
| 91 | 143,69 | 144,83 | 5,85 x 5 | 8 | 119 | |
| 92 | 145,28 | 146,42 | 5,85 x 5 | 8 | 121 | |
| 93 | 146,87 | 148,01 | 5,85 x 5 | 8 | 122 | |
| 94 | 148,47 | 149,61 | 5,85 x 5 | 8 | 124 | |
| 95 | 150,06 | 151,20 | 5,85 x 5 | 8 | 126 | |
| 96 | 151,65 | 152,79 | 5,85 x 5 | 8 | 127 | |
| 97 | 153,24 | 154,38 | 5,85 x 5 | 8 | 129 | |
| 98 | 154,83 | 155,97 | 5,85 x 5 | 8 | 130 | |
| 99 | 156,42 | 157,56 | 5,85 x 5 | 8 | 132 | |
| 100 | 158,01 | 159,15 | 5,85 x 5 | 8 | 134 | |
| 101 | 159,61 | 160,75 | 5,85 x 5 | 8 | 135 | |
| 102 | 161,20 | 162,34 | 5,85 x 5 | 8 | 137 | |
| 103 | 162,79 | 163,93 | 5,85 x 5 | 8 | 138 | |
| 104 | 164,30 | 165,52 | 5,85 x 5 | 8 | 140 | |
| 105 | 165,97 | 167,11 | 5,85 x 5 | 8 | 141 | |
| 106 | 167,56 | 168,70 | 5,85 x 5 | 8 | 143 | |
| 107 | 169,15 | 170,30 | 5,85 x 5 | 8 | 145 | |
| 108 | 170,75 | 171,89 | 5,85 x 5 | 8 | 146 | |
| 109 | 172,34 | 173,48 | 5,85 x 5 | 8 | 148 | |
| 110 | 173,93 | 175,07 | 5,85 x 5 | 8 | 149 | |
| 111 | 175,52 | 176,66 | 5,85 x 5 | 8 | 151 | |
| 112 | 177,11 | 178,25 | 5,85 x 5 | 8 | 153 | |
| 113 | 178,71 | 179,85 | 5,85 x 5 | 8 | 154 | |
| 114 | 180,30 | 181,44 | 5,85 x 5 | 8 | 156 | |
| 115 | 181,89 | 183,03 | 5,85 x 5 | 8 | 157 | |
| 116 | 183,48 | 184,62 | 5,85 x 5 | 8 | 159 | |
| 117 | 185,07 | 186,21 | 5,85 x 5 | 8 | 161 | |
| 118 | 186,66 | 187,80 | 5,85 x 5 | 8 | 162 | |
| 119 | 188,25 | 189,39 | 5,85 x 5 | 8 | 164 | |
| 120 | 189,85 | 190,99 | 5,85 x 5 | 8 | 165 | |
| 121 | 191,44 | 192,58 | 5,85 x 5 | 8 | 167 | |
| 122 | 193,03 | 194,17 | 5,85 x 5 | 8 | 169 | |
| 123 | 194,62 | 195,76 | 5,85 x 5 | 8 | 170 | |
| 124 | 195,21 | 197,35 | 5,85 x 5 | 8 | 171 | |

## Synchronising pulleys easy drive® for cylindrical bore HTD-profile

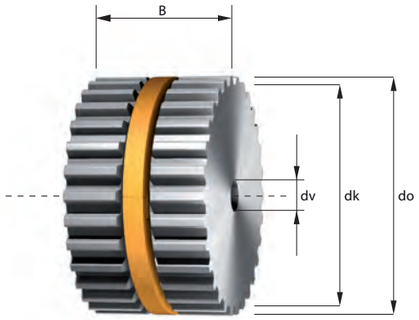


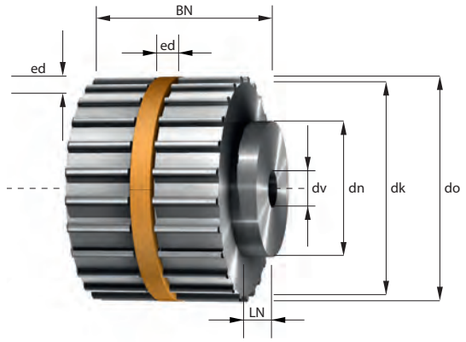


z = Number of teeth
dk = Outside diameter
do = Pitch diameter
ed = easy drive® groove
dv = Diameter of pre-bore
dmax = max. bore diameter without feather key groove
dh = Hub diameter
wh = Hub width

Min. diameter of the tension rollers without contra-flexure 60 mm, with contra-flexure 120 mm.

| Belt width | = b (mm) | 20 | 25 | 30 | 50 | 85 | 115 | 150 |
|---|---|---|---|---|---|---|---|---|
| Total width | = B (mm) | 22 | 27 | 32 | 52 | 87 | 117 | 152 |
| Total width with hub | = BN (mm) | 32 | 37 | 42 | 62 | 97 | 127 | 162 |

Other widths and larger sizes are available.

### HTD8M

| z | dk (mm) | do (mm) | ed (BxH) (mm) | dv (mm) | dmax (mm) | Hub (BxH) (mm) |
|---|---|---|---|---|---|---|
| 20 | 49,56 | 50,93 | 5,85 x 5 | 12 | 26 | 40 x 10 |
| 21 | 52,10 | 53,48 | 5,85 x 5 | 12 | 29 | 40 x 10 |
| 22 | 54,65 | 56,02 | 5,85 x 5 | 12 | 31 | 43 x 10 |
| 23 | 57,20 | 58,57 | 5,85 x 5 | 12 | 34 | 43 x 10 |
| 24 | 59,75 | 61,12 | 5,85 x 5 | 12 | 36 | 45 x 10 |
| 25 | 62,29 | 63,66 | 5,85 x 5 | 12 | 38 | 45 x 10 |
| 26 | 64,84 | 66,21 | 5,85 x 5 | 12 | 40 | 48 x 10 |
| 27 | 67,38 | 68,75 | 5,85 x 5 | 12 | 43 | 48 x 10 |
| 28 | 69,93 | 71,30 | 5,85 x 5 | 15 | 45 | 50 x 10 |
| 29 | 72,48 | 73,85 | 5,85 x 5 | 15 | 48 | 50 x 10 |
| 30 | 75,02 | 76,39 | 5,85 x 5 | 15 | 51 | 55 x 10 |
| 31 | 77,57 | 78,94 | 5,85 x 5 | 15 | 53 | 55 x 10 |
| 32 | 80,12 | 81,49 | 5,85 x 5 | 15 | 56 | 60 x 10 |
| 33 | 82,66 | 84,03 | 5,85 x 5 | 15 | 58 | 60 x 10 |
| 34 | 85,21 | 86,58 | 5,85 x 5 | 15 | 60 | 70 x 10 |

| z | dk (mm) | do (mm) | ed (BxH) (mm) | dv (mm) | dmax (mm) | Hub (BxH) (mm) |
|---|---|---|---|---|---|---|
| 35 | 87,76 | 89,13 | 5,85 x 5 | 15 | 63 | 70 x 10 |
| 36 | 90,30 | 91,67 | 5,85 x 5 | 15 | 66 | 75 x 10 |
| 37 | 92,85 | 94,22 | 5,85 x 5 | 15 | 68 | 75 x 10 |
| 38 | 95,40 | 96,77 | 5,85 x 5 | 15 | 71 | 75 x 10 |
| 39 | 97,94 | 99,31 | 5,85 x 5 | 15 | 73 | 75 x 10 |
| 40 | 100,49 | 101,86 | 5,85 x 5 | 15 | 76 | 75 x 10 |
| 41 | 103,04 | 104,41 | 5,85 x 5 | 15 | 79 | 75 x 10 |
| 42 | 105,58 | 106,95 | 5,85 x 5 | 15 | 81 | 75 x 10 |
| 43 | 108,13 | 109,50 | 5,85 x 5 | 15 | 84 | 75 x 10 |
| 44 | 110,68 | 112,05 | 5,85 x 5 | 15 | 86 | 75 x 10 |
| 45 | 113,22 | 114,59 | 5,85 x 5 | 15 | 89 | 75 x 10 |
| 46 | 115,77 | 117,14 | 5,85 x 5 | 15 | 91 | 75 x 10 |
| 47 | 118,31 | 119,68 | 5,85 x 5 | 15 | 94 | 75 x 10 |
| 48 | 120,86 | 122,23 | 5,85 x 5 | 15 | 96 | 75 x 10 |
| 49 | 123,41 | 124,78 | 5,85 x 5 | 15 | 99 | 75 x 10 |

= Standard ring sizes in stock

### HTD8M

| z | dk (mm) | do (mm) | ed (BxH) (mm) | dv (mm) | dmax (mm) | Hub (BxH) (mm) |
|---|---|---|---|---|---|---|
| 50 | 125,95 | 127,32 | 5,85 x 5 | 15 | 101 | 75 x 10 |
| 51 | 128,50 | 129,87 | 5,85 x 5 | 15 | 104 | 75 x 10 |
| 52 | 131,05 | 132,42 | 5,85 x 5 | 15 | 107 | 75 x 10 |
| 53 | 133,59 | 134,96 | 5,85 x 5 | 15 | 109 | 75 x 10 |
| 54 | 136,14 | 137,51 | 5,85 x 5 | 15 | 112 | 75 x 10 |
| 55 | 138,69 | 140,06 | 5,85 x 5 | 15 | 114 | 75 x 10 |
| 56 | 141,23 | 142,60 | 5,85 x 5 | 15 | 117 | 80 x 10 |
| 57 | 143,78 | 145,15 | 5,85 x 5 | 15 | 119 | 80 x 10 |
| 58 | 146,33 | 147,70 | 5,85 x 5 | 15 | 122 | 80 x 10 |
| 59 | 148,87 | 150,24 | 5,85 x 5 | 15 | 124 | 80 x 10 |
| 60 | 151,42 | 152,79 | 5,85 x 5 | 15 | 127 | 80 x 10 |
| 61 | 153,97 | 155,34 | 5,85 x 5 | 15 | 129 | 80 x 10 |
| 62 | 156,51 | 157,88 | 5,85 x 5 | 15 | 132 | 80 x 10 |
| 63 | 159,06 | 160,43 | 5,85 x 5 | 15 | 135 | 80 x 10 |
| 64 | 161,60 | 162,97 | 5,85 x 5 | 15 | 137 | 80 x 10 |
| 65 | 164,15 | 165,52 | 5,85 x 5 | 15 | 140 | 80 x 10 |
| 66 | 166,70 | 168,07 | 5,85 x 5 | 15 | 142 | 80 x 10 |
| 67 | 169,24 | 170,61 | 5,85 x 5 | 15 | 145 | 80 x 10 |
| 68 | 171,79 | 173,16 | 5,85 x 5 | 15 | 147 | 80 x 10 |
| 69 | 174,34 | 175,71 | 5,85 x 5 | 15 | 150 | 80 x 10 |
| 70 | 176,88 | 178,25 | 5,85 x 5 | 15 | 152 | 80 x 10 |
| 71 | 179,43 | 180,80 | 5,85 x 5 | 15 | 155 | 80 x 10 |
| 72 | 181,98 | 183,35 | 5,85 x 5 | 15 | 157 | 80 x 10 |
| 73 | 184,52 | 185,89 | 5,85 x 5 | 15 | 160 | 80 x 10 |
| 74 | 187,07 | 188,44 | 5,85 x 5 | 15 | 163 | 80 x 10 |
| 75 | 189,62 | 190,99 | 5,85 x 5 | 15 | 165 | 80 x 10 |
| 76 | 192,16 | 193,53 | 5,85 x 5 | 15 | 168 | 80 x 10 |
| 77 | 194,71 | 196,08 | 5,85 x 5 | 15 | 170 | 80 x 10 |
| 78 | 197,26 | 198,63 | 5,85 x 5 | 15 | 173 | 80 x 10 |
| 79 | 199,80 | 201,17 | 5,85 x 5 | 15 | 175 | 80 x 10 |
| 80 | 202,35 | 203,72 | 5,85 x 5 | 15 | 178 | 90 x 10 |
| 81 | 204,89 | 206,26 | 5,85 x 5 | 15 | 180 | 90 x 10 |
| 82 | 207,44 | 208,81 | 5,85 x 5 | 15 | 183 | 90 x 10 |
| 83 | 209,99 | 211,36 | 5,85 x 5 | 15 | 185 | 90 x 10 |
| 84 | 212,53 | 213,90 | 5,85 x 5 | 15 | 188 | 90 x 10 |
| 85 | 215,08 | 216,45 | 5,85 x 5 | 15 | 191 | 90 x 10 |
| 86 | 217,63 | 219,00 | 5,85 x 5 | 15 | 193 | 90 x 10 |
| 87 | 220,17 | 221,54 | 5,85 x 5 | 15 | 196 | 90 x 10 |
| 88 | 222,72 | 224,09 | 5,85 x 5 | 15 | 198 | 90 x 10 |
| 89 | 225,27 | 226,64 | 5,85 x 5 | 15 | 201 | 90 x 10 |
| 90 | 227,81 | 229,18 | 5,85 x 5 | 18 | 203 | 90 x 10 |
| 91 | 230,36 | 231,73 | 5,85 x 5 | 18 | 206 | 90 x 10 |
| 92 | 232,91 | 234,28 | 5,85 x 5 | 18 | 208 | 90 x 10 |
| 93 | 235,45 | 236,82 | 5,85 x 5 | 18 | 211 | 90 x 10 |
| 94 | 238,00 | 239,37 | 5,85 x 5 | 18 | 214 | 90 x 10 |

| z | dk (mm) | do (mm) | ed (BxH) (mm) | dv (mm) | dmax (mm) | Hub (BxH) (mm) |
|---|---|---|---|---|---|---|
| 95 | 240,88 | 241,92 | 5,85 x 5 | 18 | 216 | 90 x 10 |
| 96 | 243,09 | 244,46 | 5,85 x 5 | 18 | 219 | 90 x 10 |
| 97 | 245,64 | 247,01 | 5,85 x 5 | 18 | 221 | 90 x 10 |
| 98 | 248,18 | 249,55 | 5,85 x 5 | 18 | 224 | 90 x 10 |
| 99 | 250,73 | 252,10 | 5,85 x 5 | 18 | 226 | 90 x 10 |
| 100 | 253,28 | 254,65 | 5,85 x 5 | 18 | 229 | 90 x 10 |
| 101 | 255,82 | 257,19 | 5,85 x 5 | 18 | 231 | 90 x 10 |
| 102 | 258,37 | 259,74 | 5,85 x 5 | 18 | 234 | 90 x 10 |
| 103 | 260,92 | 262,29 | 5,85 x 5 | 18 | 236 | 90 x 10 |
| 104 | 263,46 | 264,83 | 5,85 x 5 | 18 | 239 | 90 x 10 |
| 105 | 266,01 | 267,38 | 5,85 x 5 | 18 | 242 | 90 x 10 |
| 106 | 268,56 | 269,93 | 5,85 x 5 | 18 | 244 | 90 x 10 |
| 107 | 271,10 | 272,47 | 5,85 x 5 | 18 | 247 | 90 x 10 |
| 108 | 273,65 | 275,02 | 5,85 x 5 | 18 | 249 | 90 x 10 |
| 109 | 276,20 | 277,57 | 5,85 x 5 | 18 | 252 | 90 x 10 |
| 110 | 278,74 | 280,11 | 5,85 x 5 | 18 | 254 | 90 x 10 |
| 111 | 281,29 | 282,66 | 5,85 x 5 | 18 | 257 | 90 x 10 |
| 112 | 283,84 | 285,21 | 5,85 x 5 | 20 | 259 | 90 x 10 |
| 113 | 286,38 | 287,75 | 5,85 x 5 | 20 | 262 | 90 x 10 |
| 114 | 288,93 | 290,30 | 5,85 x 5 | 20 | 264 | 90 x 10 |
| 115 | 291,47 | 292,84 | 5,85 x 5 | 20 | 267 | 90 x 10 |
| 116 | 294,02 | 295,39 | 5,85 x 5 | 20 | 270 | 90 x 10 |
| 117 | 296,57 | 297,94 | 5,85 x 5 | 20 | 272 | 90 x 10 |
| 118 | 299,11 | 300,48 | 5,85 x 5 | 20 | 275 | 90 x 10 |
| 119 | 301,66 | 303,03 | 5,85 x 5 | 20 | 277 | 90 x 10 |
| 120 | 304,21 | 305,58 | 5,85 x 5 | 20 | 280 | 90 x 10 |
| 121 | 306,75 | 308,12 | 5,85 x 5 | 20 | 282 | 90 x 10 |
| 122 | 309,30 | 310,67 | 5,85 x 5 | 20 | 285 | 90 x 10 |
| 123 | 311,85 | 313,22 | 5,85 x 5 | 20 | 287 | 90 x 10 |
| 124 | 314,39 | 315,76 | 5,85 x 5 | 20 | 290 | 90 x 10 |
| 125 | 316,94 | 318,31 | 5,85 x 5 | 20 | 292 | 90 x 10 |
| 126 | 319,49 | 320,86 | 5,85 x 5 | 20 | 295 | 90 x 10 |
| 127 | 322,03 | 323,40 | 5,85 x 5 | 20 | 298 | 90 x 10 |
| 128 | 324,58 | 325,95 | 5,85 x 5 | 20 | 300 | 90 x 10 |
| 129 | 327,13 | 328,50 | 5,85 x 5 | 20 | 303 | 90 x 10 |

## Synchronising pulleys easy drive® for cylindrical bore HTD-profile

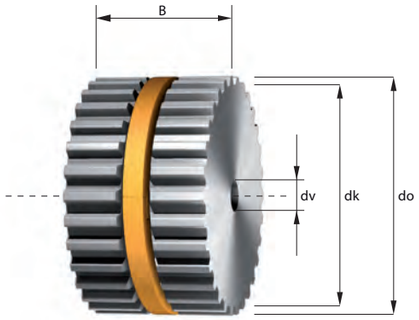


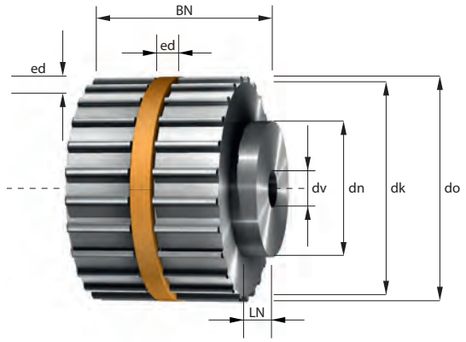


z = Number of teeth
dk = Outside diameter
do = Pitch diameter
ed = easy drive® groove
dv = Diameter of pre-bore
dmax = max. bore diameter without feather key groove
dh = Hub diameter
wh = Hub width

Min. diameter of the tension rollers without contra-flexure 180 mm, with contra-flexure 200 mm.

| Belt width | = b (mm) | 40 | 55 | 85 | 115 | 170 |
|---|---|---|---|---|---|---|
| Total width | = B (mm) | 42 | 57 | 87 | 117 | 172 |
| Total width with hub | = BN (mm) | 57 | 72 | 102 | 132 | 187 |

Other widths and larger sizes are available.

### HTD14M

| z | dk (mm) | do (mm) | ed (BxH) (mm) | dv (mm) | dmax (mm) | Hub (BxH) (mm) |
|---|---|---|---|---|---|---|
| 28 | 122,12 | 124,78 | * | 24 | 82 | 100 x 15 |
| 29 | 126,57 | 129,23 | * | 24 | 87 | 100 x 15 |
| 30 | 130,98 | 133,69 | * | 24 | 91 | 100 x 15 |
| 31 | 135,46 | 138,15 | * | 24 | 95 | 100 x 15 |
| 32 | 139,88 | 142,60 | * | 24 | 100 | 100 x 15 |
| 33 | 144,35 | 147,06 | * | 24 | 104 | 100 x 15 |
| 34 | 148,79 | 151,51 | * | 24 | 109 | 100 x 15 |
| 35 | 153,24 | 155,98 | * | 24 | 113 | 100 x 15 |
| 36 | 157,68 | 160,43 | * | 24 | 118 | 100 x 15 |
| 37 | 162,13 | 164,88 | * | 24 | 122 | 100 x 15 |
| 38 | 166,59 | 169,34 | * | 24 | 127 | 120 x 15 |
| 39 | 171,00 | 173,80 | * | 24 | 131 | 120 x 15 |
| 40 | 175,49 | 178,25 | * | 24 | 135 | 120 x 15 |
| 41 | 179,92 | 182,71 | * | 24 | 140 | 120 x 15 |
| 42 | 184,37 | 187,17 | * | 24 | 144 | 120 x 15 |

| z | dk (mm) | do (mm) | ed (BxH) (mm) | dv (mm) | dmax (mm) | Hub (BxH) (mm) |
|---|---|---|---|---|---|---|
| 43 | 188,83 | 191,62 | * | 24 | 149 | 120 x 15 |
| 44 | 193,28 | 196,08 | * | 24 | 153 | 120 x 15 |
| 45 | 197,74 | 200,53 | * | 24 | 158 | 120 x 15 |
| 46 | 202,30 | 204,99 | * | 24 | 162 | 120 x 15 |
| 47 | 206,65 | 209,45 | * | 24 | 167 | 120 x 15 |
| 48 | 211,11 | 213,90 | * | 24 | 171 | 135 x 15 |
| 49 | 215,57 | 218,36 | * | 24 | 176 | 135 x 15 |
| 50 | 220,02 | 222,82 | * | 24 | 180 | 135 x 15 |
| 51 | 224,48 | 227,27 | * | 24 | 184 | 135 x 15 |
| 52 | 228,94 | 231,73 | * | 24 | 189 | 135 x 15 |
| 53 | 233,39 | 236,19 | * | 24 | 193 | 135 x 15 |
| 54 | 237,85 | 240,64 | * | 24 | 198 | 135 x 15 |
| 55 | 242,30 | 245,10 | * | 24 | 202 | 135 x 15 |
| 56 | 246,76 | 249,55 | * | 28 | 207 | 135 x 15 |
| 57 | 251,22 | 254,01 | * | 28 | 211 | 135 x 15 |

* On request



### HTD14M

| z | dk (mm) | do (mm) | ed (BxH) (mm) | dv (mm) | dmax (mm) | Hub (BxH) (mm) |
|---|---|---|---|---|---|---|
| 58 | 255,67 | 258,47 | * | 28 | 216 | 135 x 15 |
| 59 | 260,13 | 262,92 | * | 28 | 220 | 135 x 15 |
| 60 | 264,59 | 267,38 | * | 28 | 225 | 135 x 15 |
| 61 | 269,04 | 271,84 | * | 28 | 229 | 135 x 15 |
| 62 | 273,50 | 276,29 | * | 28 | 234 | 135 x 15 |
| 63 | 277,95 | 280,75 | * | 28 | 238 | 135 x 15 |
| 64 | 282,41 | 285,21 | * | 28 | 242 | 135 x 15 |
| 65 | 286,87 | 289,68 | * | 28 | 247 | 135 x 15 |
| 66 | 291,32 | 294,12 | * | 28 | 251 | 135 x 15 |
| 67 | 295,78 | 298,57 | * | 28 | 256 | 135 x 15 |
| 68 | 300,24 | 303,03 | * | 28 | 260 | 135 x 15 |
| 69 | 304,69 | 307,49 | * | 28 | 265 | 135 x 15 |
| 70 | 309,15 | 311,94 | * | 28 | 269 | 135 x 15 |
| 71 | 313,61 | 316,40 | * | 28 | 274 | 135 x 15 |
| 72 | 318,06 | 320,86 | * | 28 | 278 | 135 x 15 |
| 73 | 322,52 | 325,31 | * | 28 | 283 | 135 x 15 |
| 74 | 326,97 | 329,77 | * | 28 | 287 | 135 x 15 |
| 75 | 331,42 | 334,22 | * | 28 | 291 | 135 x 15 |
| 76 | 335,89 | 338,68 | * | 28 | 296 | 135 x 15 |
| 77 | 340,34 | 343,15 | * | 28 | 300 | 135 x 15 |
| 78 | 344,80 | 347,59 | * | 28 | 305 | 135 x 15 |
| 79 | 349,26 | 352,05 | * | 28 | 309 | 135 x 15 |
| 80 | 353,71 | 356,51 | * | 28 | 314 | 135 x 15 |
| 81 | 358,17 | 360,96 | * | 28 | 318 | 135 x 15 |
| 82 | 362,63 | 365,42 | * | 28 | 323 | 135 x 15 |
| 83 | 367,08 | 369,88 | * | 28 | 327 | 135 x 15 |
| 84 | 371,54 | 374,33 | * | 28 | 332 | 135 x 15 |
| 85 | 375,99 | 378,79 | * | 28 | 336 | 135 x 15 |
| 86 | 380,45 | 383,24 | * | 28 | 340 | 135 x 15 |
| 87 | 384,91 | 387,70 | * | 28 | 345 | 135 x 15 |
| 88 | 389,39 | 392,16 | * | 28 | 349 | 135 x 15 |
| 89 | 393,82 | 396,61 | * | 28 | 354 | 135 x 15 |
| 90 | 398,28 | 401,07 | * | 28 | 358 | 135 x 15 |
| 91 | 402,73 | 405,53 | * | 28 | 363 | 135 x 15 |
| 92 | 407,19 | 409,98 | * | 28 | 367 | 135 x 15 |
| 93 | 411,64 | 414,44 | * | 28 | 372 | 135 x 15 |
| 94 | 416,10 | 418,90 | * | 28 | 376 | 135 x 15 |
| 95 | 420,56 | 423,35 | * | 28 | 381 | 135 x 15 |
| 96 | 425,01 | 427,81 | * | 28 | 385 | 135 x 15 |
| 97 | 429,47 | 432,26 | * | 28 | 389 | 135 x 15 |
| 98 | 433,93 | 436,72 | * | 28 | 394 | 135 x 15 |
| 99 | 438,38 | 441,18 | * | 28 | 398 | 135 x 15 |
| 100 | 442,84 | 445,63 | * | 28 | 403 | 135 x 15 |
| 101 | 447,30 | 450,09 | * | 28 | 407 | 135 x 15 |
| 102 | 451,75 | 454,55 | * | 28 | 412 | 135 x 15 |

| z | dk (mm) | do (mm) | ed (BxH) (mm) | dv (mm) | dmax (mm) | Hub (BxH) (mm) |
|---|---|---|---|---|---|---|
| 103 | 456,21 | 459,00 | * | 28 | 416 | 135 x 15 |
| 104 | 460,66 | 463,46 | * | 28 | 421 | 135 x 15 |
| 105 | 465,12 | 467,92 | * | 28 | 425 | 135 x 15 |
| 106 | 469,58 | 472,37 | * | 28 | 430 | 135 x 15 |
| 107 | 474,03 | 476,83 | * | 28 | 434 | 135 x 15 |
| 108 | 478,49 | 481,28 | * | 28 | 438 | 135 x 15 |
| 109 | 482,95 | 485,74 | * | 28 | 443 | 135 x 15 |
| 110 | 487,40 | 490,20 | * | 28 | 447 | 135 x 15 |
| 111 | 491,86 | 494,65 | * | 28 | 452 | 135 x 15 |
| 112 | 496,32 | 499,11 | * | 28 | 456 | 135 x 15 |
| 113 | 500,77 | 503,57 | * | 28 | 461 | 135 x 15 |
| 114 | 505,23 | 508,02 | * | 28 | 465 | 135 x 15 |

## Synchronising pulleys easy drive® for cylindrical bore Imperial-profile

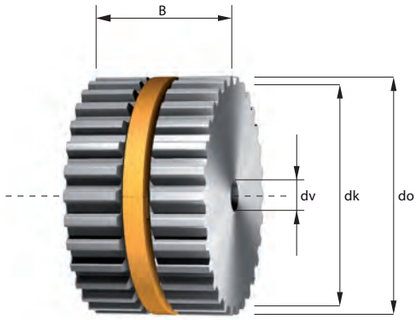


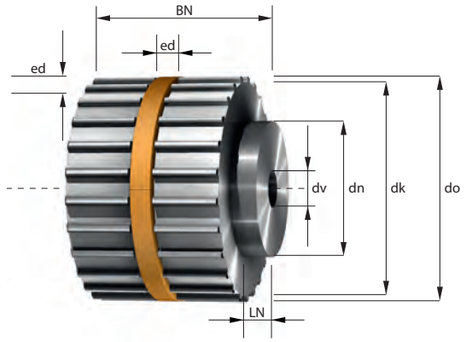


z = Number of teeth
dk = Outside diameter
do = Pitch diameter
ed = easy drive® groove
dv = Diameter of pre-bore
dmax = max. bore diameter without feather key groove
dh = Hub diameter
wh = Hub width

Min. diameter of the tension rollers without contra-flexure 15 mm, with contra-flexure 18 mm.

| Imperial code | | 075 | 100 | 150 | 200 |
|---|---|---|---|---|---|
| Belt width | = b (mm) | 19,1 | 25,4 | 38,1 | 50,8 |
| Total width | = B (mm) | 21,1 | 27,4 | 40,1 | 52,8 |
| Total width with hub | = BN (mm) | 27,1 | 33,4 | 46,1 | 58,8 |

Other widths and larger sizes are available.

### MXL (T1/8“)

| z | dk (mm) | do (mm) | ed (BxH) (mm) | dv (mm) | dmax (mm) | Hub (BxH) (mm) |
|---|---|---|---|---|---|---|
| 34 | 21,48 | 21,99 | 5,85 x 4 | 3H7 | 6 | 14 x 6 |
| 35 | 22,13 | 22,64 | 5,85 x 4 | 3H7 | 7 | 14 x 6 |
| 36 | 22,78 | 23,29 | 5,85 x 4 | 3H7 | 8 | 14 x 6 |
| 37 | 23,42 | 23,93 | 5,85 x 4 | 3H7 | 8 | 14 x 6 |
| 38 | 24,07 | 24,58 | 5,85 x 4 | 3H7 | 9 | 14 x 6 |
| 39 | 24,72 | 25,23 | 5,85 x 4 | 3H7 | 9 | 14 x 6 |
| 40 | 25,36 | 25,87 | 5,85 x 4 | 3H7 | 10 | 14 x 6 |
| 41 | 26,01 | 26,52 | 5,85 x 4 | 3H7 | 10 | 14 x 6 |
| 42 | 26,66 | 27,17 | 5,85 x 4 | 3H7 | 10 | 14 x 6 |
| 43 | 27,30 | 27,81 | 5,85 x 4 | 3H7 | 11 | 14 x 6 |
| 44 | 27,95 | 28,46 | 5,85 x 4 | 3H7 | 12 | 14 x 6 |
| 45 | 28,60 | 29,11 | 5,85 x 4 | 3H7 | 12 | 14 x 6 |
| 46 | 29,24 | 29,75 | 5,85 x 4 | 3H7 | 13 | 14 x 6 |
| 47 | 29,89 | 30,40 | 5,85 x 4 | 3H7 | 14 | 14 x 6 |
| 48 | 30,54 | 31,05 | 5,85 x 5 | 4H7 | 10 | 20 x 6 |

| z | dk (mm) | do (mm) | ed (BxH) (mm) | dv (mm) | dmax (mm) | Hub (BxH) (mm) |
|---|---|---|---|---|---|---|
| 49 | 31,18 | 31,69 | 5,85 x 5 | 4H7 | 11 | 20 x 6 |
| 50 | 31,83 | 32,34 | 5,85 x 5 | 4H7 | 12 | 20 x 6 |
| 51 | 32,48 | 32,99 | 5,85 x 5 | 4H7 | 12 | 20 x 6 |
| 52 | 33,13 | 33,63 | 5,85 x 5 | 4H7 | 13 | 20 x 6 |
| 53 | 33,77 | 34,28 | 5,85 x 5 | 4H7 | 14 | 20 x 6 |
| 54 | 34,42 | 34,93 | 5,85 x 5 | 4H7 | 14 | 22 x 6 |
| 55 | 35,06 | 35,57 | 5,85 x 5 | 4H7 | 15 | 22 x 6 |
| 56 | 35,71 | 36,22 | 5,85 x 5 | 4H7 | 15 | 22 x 6 |
| 57 | 36,36 | 36,87 | 5,85 x 5 | 4H7 | 16 | 22 x 6 |
| 58 | 37,00 | 37,51 | 5,85 x 5 | 4H7 | 17 | 22 x 6 |
| 59 | 37,65 | 38,16 | 5,85 x 5 | 4H7 | 17 | 22 x 6 |
| 60 | 38,30 | 38,81 | 5,85 x 5 | 6H7 | 18 | 22 x 6 |
| 61 | 38,95 | 39,46 | 5,85 x 5 | 6H7 | 19 | 26 x 6 |
| 62 | 39,59 | 40,10 | 5,85 x 5 | 6H7 | 19 | 26 x 6 |
| 63 | 40,24 | 40,75 | 5,85 x 5 | 6H7 | 20 | 26 x 6 |

= Standard ring sizes in stock

### MXL (T1/8“)

| z | dk (mm) | do (mm) | ed (BxH) (mm) | dv (mm) | dmax (mm) | Hub (BxH) (mm) |
|---|---|---|---|---|---|---|
| 64 | 40,89 | 41,40 | 5,85 x 5 | 6H7 | 20 | 26 x 6 |
| 65 | 41,53 | 42,04 | 5,85 x 5 | 6H7 | 21 | 26 x 6 |
| 66 | 42,18 | 42,69 | 5,85 x 5 | 6H7 | 22 | 26 x 6 |
| 67 | 42,83 | 43,34 | 5,85 x 5 | 6H7 | 22 | 26 x 6 |
| 68 | 43,47 | 43,98 | 5,85 x 5 | 6H7 | 23 | 26 x 6 |
| 69 | 44,12 | 44,63 | 5,85 x 5 | 6H7 | 24 | 26 x 6 |
| 70 | 44,77 | 45,28 | 5,85 x 5 | 6H7 | 24 | 26 x 6 |
| 71 | 45,41 | 45,92 | 5,85 x 5 | 6H7 | 25 | 26 x 6 |
| 72 | 46,06 | 46,57 | 5,85 x 5 | 6H7 | 26 | 26 x 6 |
| 73 | 46,71 | 47,22 | 5,85 x 5 | 6H7 | 26 | 34 x 6 |
| 74 | 47,35 | 47,86 | 5,85 x 5 | 6H7 | 27 | 34 x 6 |
| 75 | 48,00 | 48,51 | 5,85 x 5 | 6H7 | 28 | 34 x 6 |
| 76 | 48,65 | 49,16 | 5,85 x 5 | 6H7 | 28 | 34 x 6 |
| 77 | 49,29 | 49,80 | 5,85 x 5 | 6H7 | 29 | 34 x 6 |
| 78 | 49,94 | 50,45 | 5,85 x 5 | 6H7 | 30 | 34 x 6 |
| 79 | 50,29 | 51,10 | 5,85 x 5 | 6H7 | 30 | 34 x 6 |
| 80 | 51,23 | 51,74 | 5,85 x 5 | 6H7 | 31 | 34 x 6 |
| 81 | 51,88 | 52,39 | 5,85 x 5 | 6H7 | 31 | 34 x 6 |
| 82 | 52,53 | 53,04 | 5,85 x 5 | 6H7 | 32 | 34 x 6 |
| 83 | 53,17 | 53,68 | 5,85 x 5 | 6H7 | 33 | 34 x 6 |
| 84 | 53,82 | 54,33 | 5,85 x 5 | 6H7 | 33 | 34 x 6 |
| 85 | 54,47 | 54,98 | 5,85 x 5 | 6H7 | 34 | 34 x 6 |
| 86 | 55,12 | 55,63 | 5,85 x 5 | 6H7 | 35 | 34 x 6 |
| 87 | 55,76 | 56,27 | 5,85 x 5 | 8H7 | 35 | 34 x 6 |
| 88 | 56,41 | 56,92 | 5,85 x 5 | 8H7 | 36 | 34 x 6 |
| 89 | 57,06 | 57,57 | 5,85 x 5 | 8H7 | 37 | 34 x 6 |
| 90 | 57,70 | 58,21 | 5,85 x 5 | 8H7 | 37 | 34 x 6 |
| 91 | 58,35 | 58,86 | 5,85 x 5 | 8H7 | 38 | 38 x 6 |
| 92 | 59,00 | 59,51 | 5,85 x 5 | 8H7 | 39 | 38 x 6 |
| 93 | 59,64 | 60,15 | 5,85 x 5 | 8H7 | 39 | 38 x 6 |
| 94 | 60,29 | 60,80 | 5,85 x 5 | 8H7 | 40 | 38 x 6 |
| 95 | 60,94 | 61,45 | 5,85 x 5 | 8H7 | 41 | 38 x 6 |
| 96 | 61,58 | 62,09 | 5,85 x 5 | 8H7 | 41 | 38 x 6 |
| 97 | 62,23 | 62,74 | 5,85 x 5 | 8H7 | 42 | 38 x 6 |
| 98 | 62,88 | 63,39 | 5,85 x 5 | 8H7 | 42 | 38 x 6 |
| 99 | 63,52 | 64,03 | 5,85 x 5 | 8H7 | 43 | 38 x 6 |
| 100 | 64,17 | 64,68 | 5,85 x 5 | 8H7 | 44 | 38 x 6 |
| 101 | 64,82 | 65,33 | 5,85 x 5 | 8H7 | 44 | 38 x 6 |
| 102 | 65,46 | 65,97 | 5,85 x 5 | 8H7 | 45 | 38 x 6 |
| 103 | 66,11 | 66,62 | 5,85 x 5 | 8H7 | 46 | 38 x 6 |
| 104 | 66,76 | 67,27 | 5,85 x 5 | 8H7 | 46 | 38 x 6 |
| 105 | 67,40 | 67,91 | 5,85 x 5 | 8H7 | 47 | 38 x 6 |
| 106 | 68,05 | 68,56 | 5,85 x 5 | 8H7 | 48 | 38 x 6 |
| 107 | 68,70 | 69,21 | 5,85 x 5 | 8H7 | 48 | 38 x 6 |
| 108 | 69,35 | 69,86 | 5,85 x 5 | 8H7 | 49 | 38 x 6 |

| z | dk (mm) | do (mm) | ed (BxH) (mm) | dv (mm) | dmax (mm) | Hub (BxH) (mm) |
|---|---|---|---|---|---|---|
| 109 | 69,99 | 70,50 | 5,85 x 5 | 8H7 | 50 | 38 x 6 |
| 110 | 70,64 | 71,15 | 5,85 x 5 | 8H7 | 50 | 38 x 6 |
| 111 | 71,29 | 71,80 | 5,85 x 5 | 8H7 | 51 | 38 x 6 |
| 112 | 71,93 | 72,44 | 5,85 x 5 | 8H7 | 52 | 38 x 6 |
| 113 | 72,58 | 73,09 | 5,85 x 5 | 10H7 | 52 | 40 x 6 |
| 114 | 73,23 | 73,74 | 5,85 x 5 | 10H7 | 53 | 40 x 6 |

## Synchronising pulleys easy drive® for cylindrical bore Imperial-profile

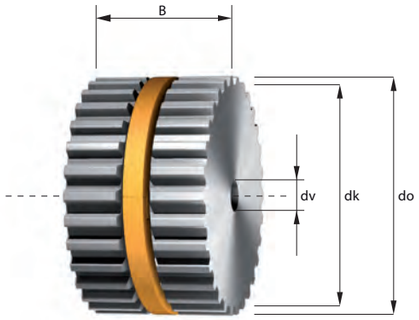


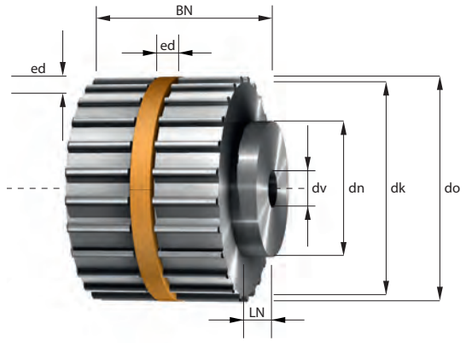


z = Number of teeth
dk = Outside diameter
do = Pitch diameter
ed = easy drive® groove
dv = Diameter of pre-bore
dmax = max. bore diameter without feather key groove
dh = Hub diameter
wh = Hub width

Min. diameter of the tension rollers without contra-flexure 30 mm, with contra-flexure 30 mm.

| Imperial code | | 075 | 100 | 150 | 200 | 300 | 400 |
|---|---|---|---|---|---|---|---|
| Belt width | = b (mm) | 19,1 | 25,4 | 38,1 | 50,8 | 76,2 | 101,6 |
| Total width | = B (mm) | 21,1 | 27,4 | 40,1 | 52,8 | 78,2 | 103,6 |
| Total width with hub | = BN (mm) | B + 5,3/8,1/12,1 mm | | | | | |

Other widths and larger sizes are available.

### XL (T1/5“)

| z | dk (mm) | do (mm) | ed (BxH) (mm) | dv (mm) | dmax (mm) | Hub (BxH) (mm) |
|---|---|---|---|---|---|---|
| 14 | 22,13 | 22,64 | 5,85 x 4 | 6H7 | 7 | 14,3 x 5,3 |
| 15 | 23,75 | 24,26 | 5,85 x 4 | 6H7 | 8 | 15,9 x 5,3 |
| 16 | 25,36 | 25,87 | 5,85 x 4 | 6H7 | 10 | 17,5 x 5,3 |
| 17 | 26,98 | 27,49 | 5,85 x 4 | 6H7 | 12 | 20,6 x 5,3 |
| 18 | 28,60 | 29,11 | 5,85 x 4 | 6H7 | 12 | 20,6 x 5,3 |
| 19 | 30,21 | 30,72 | 5,85 x 5 | 6H7 | 10 | 23,8 x 8,1 |
| 20 | 31,83 | 32,34 | 5,85 x 5 | 6H7 | 12 | 23,8 x 8,1 |
| 21 | 33,45 | 33,96 | 5,85 x 5 | 6H7 | 13 | 23,8 x 8,1 |
| 22 | 35,07 | 35,57 | 5,85 x 5 | 6H7 | 15 | 25,4 x 8,1 |
| 23 | 36,86 | 37,19 | 5,85 x 5 | 6H7 | 17 | 27 x 8,1 |
| 24 | 38,30 | 38,81 | 5,85 x 5 | 6H7 | 18 | 27 x 8,1 |
| 25 | 39,92 | 40,43 | 5,85 x 5 | 6H7 | 20 | 30 x 8,1 |
| 26 | 41,53 | 42,04 | 5,85 x 5 | 6H7 | 22 | 30 x 8,1 |
| 27 | 43,15 | 43,66 | 5,85 x 5 | 6H7 | 23 | 30 x 8,1 |
| 28 | 44,77 | 45,28 | 5,85 x 5 | 6H7 | 25 | 30 x 8,1 |

| z | dk (mm) | do (mm) | ed (BxH) (mm) | dv (mm) | dmax (mm) | Hub (BxH) (mm) |
|---|---|---|---|---|---|---|
| 29 | 46,38 | 46,89 | 5,85 x 5 | 6H7 | 26 | 34 x 8,1 |
| 30 | 48,00 | 48,51 | 5,85 x 5 | 6H7 | 28 | 34 x 8,1 |
| 31 | 49,62 | 50,13 | 5,85 x 5 | 8H7 | 30 | 38 x 12,1 |
| 32 | 51,24 | 51,74 | 5,85 x 5 | 8H7 | 31 | 38 x 12,1 |
| 33 | 52,85 | 53,36 | 5,85 x 5 | 8H7 | 33 | 38 x 12,1 |
| 34 | 54,47 | 54,98 | 5,85 x 5 | 8H7 | 34 | 38 x 12,1 |
| 35 | 56,09 | 56,60 | 5,85 x 5 | 8H7 | 36 | 38 x 12,1 |
| 36 | 57,70 | 58,21 | 5,85 x 5 | 8H7 | 38 | 38 x 12,1 |
| 37 | 59,32 | 59,83 | 5,85 x 5 | 8H7 | 39 | 38 x 12,1 |
| 38 | 60,94 | 61,45 | 5,85 x 5 | 8H7 | 41 | 38 x 12,1 |
| 39 | 62,55 | 63,06 | 5,85 x 5 | 8H7 | 43 | 38 x 12,1 |
| 40 | 64,17 | 64,68 | 5,85 x 5 | 8H7 | 44 | 38 x 12,1 |
| 41 | 65,79 | 66,30 | 5,85 x 5 | 8H7 | 46 | 38 x 12,1 |
| 42 | 67,40 | 67,91 | 5,85 x 5 | 8H7 | 47 | 38 x 12,1 |
| 43 | 69,02 | 69,53 | 5,85 x 5 | 8H7 | 49 | 38 x 12,1 |

= Standard ring sizes in stock

### XL (T1/5“)

| z | dk (mm) | do (mm) | ed (BxH) (mm) | dv (mm) | dmax (mm) | Hub (BxH) (mm) |
|---|---|---|---|---|---|---|
| 44 | 70,64 | 71,15 | 5,85 x 5 | 8H7 | 51 | 38 x 12,1 |
| 45 | 72,26 | 72,77 | 5,85 x 5 | 8H7 | 52 | 38 x 12,1 |
| 46 | 73,87 | 74,38 | 5,85 x 5 | 8H7 | 54 | 38 x 12,1 |
| 47 | 75,49 | 76,00 | 5,85 x 5 | 8H7 | 55 | 38 x 12,1 |
| 48 | 77,11 | 77,62 | 5,85 x 5 | 8H7 | 57 | 38 x 12,1 |
| 49 | 78,72 | 79,23 | 5,85 x 5 | 8H7 | 59 | 38 x 12,1 |
| 50 | 80,34 | 80,85 | 5,85 x 5 | 8H7 | 60 | 38 x 12,1 |
| 51 | 81,96 | 82,47 | 5,85 x 5 | 8H7 | 62 | 38 x 12,1 |
| 52 | 83,57 | 84,08 | 5,85 x 5 | 8H7 | 64 | 38 x 12,1 |
| 53 | 85,19 | 85,70 | 5,85 x 5 | 8H7 | 65 | 38 x 12,1 |
| 54 | 86,81 | 87,32 | 5,85 x 5 | 8H7 | 67 | 38 x 12,1 |
| 55 | 88,43 | 88,94 | 5,85 x 5 | 8H7 | 68 | 38 x 12,1 |
| 56 | 90,04 | 90,55 | 5,85 x 5 | 8H7 | 70 | 38 x 12,1 |
| 57 | 91,66 | 92,17 | 5,85 x 5 | 8H7 | 72 | 38 x 12,1 |
| 58 | 93,28 | 93,79 | 5,85 x 5 | 8H7 | 72 | 38 x 12,1 |
| 59 | 94,89 | 95,40 | 5,85 x 5 | 8H7 | 72 | 38 x 12,1 |
| 60 | 96,51 | 97,02 | 5,85 x 5 | 8H7 | 72 | 38 x 12,1 |
| 61 | 98,13 | 98,64 | 5,85 x 5 | 8H7 | 73 | 38 x 12,1 |
| 62 | 99,74 | 100,25 | 5,85 x 5 | 8H7 | 75 | 38 x 12,1 |
| 63 | 101,36 | 101,87 | 5,85 x 5 | 8H7 | 76 | 38 x 12,1 |
| 64 | 102,98 | 103,49 | 5,85 x 5 | 8H7 | 78 | 38 x 12,1 |
| 65 | 104,60 | 105,11 | 5,85 x 5 | 8H7 | 80 | 38 x 12,1 |
| 66 | 106,21 | 106,72 | 5,85 x 5 | 8H7 | 81 | 38 x 12,1 |
| 67 | 107,83 | 108,34 | 5,85 x 5 | 8H7 | 83 | 38 x 12,1 |
| 68 | 109,45 | 109,96 | 5,85 x 5 | 8H7 | 84 | 38 x 12,1 |
| 69 | 111,06 | 111,57 | 5,85 x 5 | 8H7 | 86 | 38 x 12,1 |
| 70 | 112,68 | 113,19 | 5,85 x 5 | 8H7 | 88 | 38 x 12,1 |
| 71 | 114,30 | 114,81 | 5,85 x 5 | 8H7 | 89 | 38 x 12,1 |
| 72 | 115,92 | 116,43 | 5,85 x 5 | 8H7 | 91 | 38 x 12,1 |
| 73 | 117,53 | 118,04 | 5,85 x 5 | 10H7 | 93 | 45 x 12,1 |
| 74 | 119,15 | 119,66 | 5,85 x 5 | 10H7 | 94 | 45 x 12,1 |
| 75 | 120,77 | 121,28 | 5,85 x 5 | 10H7 | 96 | 45 x 12,1 |
| 76 | 122,38 | 122,89 | 5,85 x 5 | 10H7 | 97 | 45 x 12,1 |
| 77 | 124,00 | 124,51 | 5,85 x 5 | 10H7 | 99 | 45 x 12,1 |
| 78 | 125,62 | 126,13 | 5,85 x 5 | 10H7 | 101 | 45 x 12,1 |
| 79 | 127,23 | 127,74 | 5,85 x 5 | 10H7 | 102 | 45 x 12,1 |
| 80 | 128,85 | 129,36 | 5,85 x 5 | 10H7 | 104 | 45 x 12,1 |
| 81 | 130,47 | 130,98 | 5,85 x 5 | 10H7 | 105 | 45 x 12,1 |
| 82 | 132,08 | 132,60 | 5,85 x 5 | 10H7 | 107 | 45 x 12,1 |
| 83 | 133,70 | 134,21 | 5,85 x 5 | 10H7 | 109 | 45 x 12,1 |
| 84 | 135,32 | 135,83 | 5,85 x 5 | 10H7 | 110 | 45 x 12,1 |
| 85 | 136,94 | 137,45 | 5,85 x 5 | 10H7 | 112 | 45 x 12,1 |
| 86 | 138,55 | 139,06 | 5,85 x 5 | 10H7 | 114 | 45 x 12,1 |
| 87 | 140,17 | 140,68 | 5,85 x 5 | 10H7 | 115 | 45 x 12,1 |
| 88 | 141,79 | 142,30 | 5,85 x 5 | 10H7 | 117 | 45 x 12,1 |

| z | dk (mm) | do (mm) | ed (BxH) (mm) | dv (mm) | dmax (mm) | Hub (BxH) (mm) |
|---|---|---|---|---|---|---|
| 89 | 143,40 | 143,91 | 5,85 x 5 | 10H7 | 118 | 45 x 12,1 |
| 90 | 145,02 | 145,53 | 5,85 x 5 | 10H7 | 120 | 45 x 12,1 |
| 91 | 146,64 | 147,15 | 5,85 x 5 | 10H7 | 122 | 45 x 12,1 |
| 92 | 148,25 | 148,77 | 5,85 x 5 | 10H7 | 123 | 45 x 12,1 |
| 93 | 149,87 | 150,38 | 5,85 x 5 | 10H7 | 125 | 45 x 12,1 |
| 94 | 151,49 | 152,00 | 5,85 x 5 | 10H7 | 126 | 45 x 12,1 |
| 95 | 153,11 | 153,62 | 5,85 x 5 | 12H7 | 128 | 55 x 12,1 |
| 96 | 154,72 | 155,23 | 5,85 x 5 | 12H7 | 130 | 55 x 12,1 |
| 97 | 156,34 | 156,85 | 5,85 x 5 | 12H7 | 131 | 55 x 12,1 |
| 98 | 157,96 | 158,47 | 5,85 x 5 | 12H7 | 133 | 55 x 12,1 |
| 99 | 159,57 | 160,08 | 5,85 x 5 | 12H7 | 135 | 55 x 12,1 |
| 100 | 161,19 | 161,70 | 5,85 x 5 | 12H7 | 136 | 55 x 12,1 |
| 101 | 162,81 | 163,32 | 5,85 x 5 | 12H7 | 138 | 55 x 12,1 |
| 102 | 164,43 | 164,94 | 5,85 x 5 | 12H7 | 139 | 55 x 12,1 |
| 103 | 166,04 | 166,55 | 5,85 x 5 | 12H7 | 141 | 55 x 12,1 |
| 104 | 167,66 | 168,17 | 5,85 x 5 | 12H7 | 143 | 55 x 12,1 |
| 105 | 169,28 | 169,79 | 5,85 x 5 | 12H7 | 144 | 55 x 12,1 |
| 106 | 170,89 | 171,40 | 5,85 x 5 | 12H7 | 146 | 55 x 12,1 |
| 107 | 172,51 | 173,02 | 5,85 x 5 | 12H7 | 148 | 55 x 12,1 |
| 108 | 174,13 | 174,64 | 5,85 x 5 | 12H7 | 149 | 55 x 12,1 |
| 109 | 175,74 | 176,25 | 5,85 x 5 | 12H7 | 151 | 55 x 12,1 |
| 110 | 177,36 | 177,87 | 5,85 x 5 | 12H7 | 152 | 55 x 12,1 |
| 111 | 178,98 | 179,49 | 5,85 x 5 | 12H7 | 154 | 55 x 12,1 |
| 112 | 180,60 | 181,11 | 5,85 x 5 | 12H7 | 156 | 55 x 12,1 |
| 113 | 182,21 | 182,72 | 5,85 x 5 | 12H7 | 157 | 55 x 12,1 |
| 114 | 183,83 | 184,34 | 5,85 x 5 | 12H7 | 159 | 55 x 12,1 |

## Synchronising pulleys easy drive® for cylindrical bore Imperial-profile

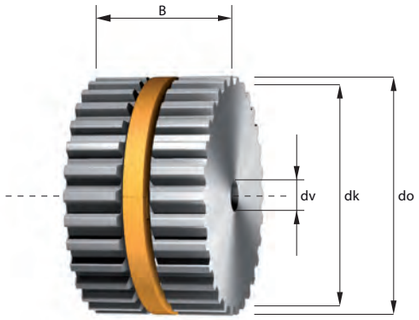


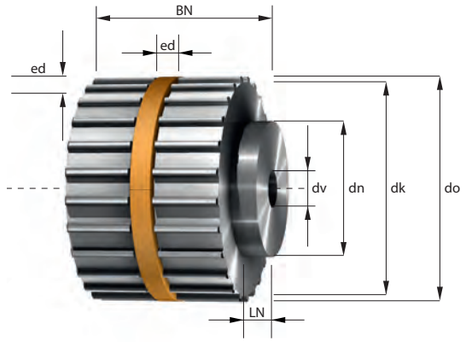


z = Number of teeth
dk = Outside diameter
do = Pitch diameter
ed = easy drive® groove
dv = Diameter of pre-bore
dmax = max. bore diameter without feather key groove
dh = Hub diameter
wh = Hub width

Min. diameter of the tension rollers without contra-flexure 60 mm, with contra-flexure 60 mm.

| Imperial code | | 075 | 100 | 150 | 200 | 300 | 400 | 600 |
|---|---|---|---|---|---|---|---|---|
| Belt width | = b (mm) | 19,1 | 25,4 | 38,1 | 50,8 | 76,2 | 101,6 | 152,4 |
| Total width | = B (mm) | 21,1 | 27,4 | 40,1 | 52,8 | 78,2 | 103,6 | 154,4 |
| Total width with hub | = BN (mm) | B + 7 / 9 mm | | | | | | |

Other widths and larger sizes are available.

### L (T3/8“)

| z | dk (mm) | do (mm) | ed (BxH) (mm) | dv (mm) | dmax (mm) | Hub (BxH) (mm) |
|---|---|---|---|---|---|---|
| 10 | 29,56 | 30,32 | 5,85 x 4 | 6/8H7 | 12 | 22 x 7 |
| 11 | 32,59 | 33,35 | 5,85 x 5 | 6/8H7 | 12 | 26 x 7 |
| 12 | 35,62 | 36,45 | 5,85 x 5 | 6/8H7 | 15 | 28 x 7 |
| 13 | 38,65 | 39,41 | 5,85 x 5 | 6/8H7 | 18 | 30 x 7 |
| 14 | 41,68 | 42,45 | 5,85 x 5 | 8H7 | 20 | 33 x 7 |
| 15 | 44,72 | 45,48 | 5,85 x 5 | 8H7 | 20 | 36 x 7 |
| 16 | 47,75 | 48,51 | 5,85 x 5 | 8H7 | 23 | 38 x 7 |
| 17 | 50,78 | 51,54 | 5,85 x 5 | 10H7 | 26 | 40 x 7 |
| 18 | 53,81 | 54,57 | 5,85 x 5 | 10H7 | 29 | 40 x 7 |
| 19 | 56,84 | 57,61 | 5,85 x 5 | 10H7 | 32 | 40 x 7 |
| 20 | 59,88 | 60,64 | 5,85 x 5 | 10H7 | 35 | 46 x 7 |
| 21 | 62,91 | 63,67 | 5,85 x 5 | 10H7 | 38 | 46 x 7 |
| 22 | 65,94 | 66,70 | 5,85 x 5 | 10H7 | 39 | 50 x 7 |
| 23 | 68,97 | 69,73 | 5,85 x 5 | 12H7 | 42 | 50 x 7 |
| 24 | 72,00 | 72,77 | 5,85 x 5 | 12H7 | 47 | 50 x 7 |

| z | dk (mm) | do (mm) | ed (BxH) (mm) | dv (mm) | dmax (mm) | Hub (BxH) (mm) |
|---|---|---|---|---|---|---|
| 25 | 75,04 | 75,80 | 5,85 x 5 | 12H7 | 50 | 50 x 7 |
| 26 | 78,07 | 78,83 | 5,85 x 5 | 12H7 | 53 | 50 x 7 |
| 27 | 81,10 | 81,86 | 5,85 x 5 | 12H7 | 56 | 50 x 7 |
| 28 | 84,13 | 84,89 | 5,85 x 5 | 12H7 | 58 | 50 x 7 |
| 29 | 87,16 | 87,93 | 5,85 x 5 | 12H7 | 61 | 50 x 7 |
| 30 | 90,20 | 90,96 | 5,85 x 5 | 12H7 | 64 | 50 x 7 |
| 31 | 93,23 | 93,99 | 5,85 x 5 | 12H7 | 68 | 50 x 7 |
| 32 | 96,26 | 97,02 | 5,85 x 5 | 12H7 | 71 | 50 x 7 |
| 33 | 99,29 | 100,05 | 5,85 x 5 | 12H7 | 74 | 50 x 7 |
| 34 | 102,32 | 103,08 | 5,85 x 5 | 12H7 | 77 | 50 x 7 |
| 35 | 105,36 | 106,12 | 5,85 x 5 | 12H7 | 80 | 50 x 7 |
| 36 | 108,39 | 109,15 | 5,85 x 5 | 12H7 | 83 | 50 x 7 |
| 37 | 111,42 | 112,18 | 5,85 x 5 | 12H7 | 86 | 50 x 7 |
| 38 | 114,45 | 115,21 | 5,85 x 5 | 12H7 | 89 | 50 x 7 |
| 39 | 117,48 | 118,24 | 5,85 x 5 | 12H7 | 92 | 50 x 7 |

= Standard ring sizes in stock



### L (T3/8“)

| z | dk (mm) | do (mm) | ed (BxH) (mm) | dv (mm) | dmax (mm) | Hub (BxH) (mm) |
|---|---|---|---|---|---|---|
| 40 | 120,51 | 121,28 | 5,85 x 5 | 12H7 | 96 | 50 x 7 |
| 41 | 123,55 | 124,31 | 5,85 x 5 | 12H7 | 99 | 50 x 7 |
| 42 | 126,58 | 127,34 | 5,85 x 5 | 12H7 | 99 | 50 x 7 |
| 43 | 129,61 | 130,37 | 5,85 x 5 | 12H7 | 102 | 50 x 7 |
| 44 | 132,64 | 133,40 | 5,85 x 5 | 12H7 | 105 | 50 x 7 |
| 45 | 135,68 | 136,44 | 5,85 x 5 | 12H7 | 105 | 50 x 7 |
| 46 | 138,71 | 139,47 | 5,85 x 5 | 12H7 | 108 | 50 x 7 |
| 47 | 141,74 | 142,50 | 5,85 x 5 | 12H7 | 111 | 50 x 7 |
| 48 | 144,77 | 145,53 | 5,85 x 5 | 12H7 | 115 | 50 x 7 |
| 49 | 147,80 | 148,56 | 5,85 x 5 | 15H7 | 118 | 50 x 9 |
| 50 | 150,83 | 151,60 | 5,85 x 5 | 15H7 | 121 | 50 x 9 |
| 51 | 153,87 | 154,63 | 5,85 x 5 | 15H7 | 124 | 50 x 9 |
| 52 | 156,90 | 157,66 | 5,85 x 5 | 15H7 | 127 | 50 x 9 |
| 53 | 159,93 | 160,69 | 5,85 x 5 | 15H7 | 131 | 50 x 9 |
| 54 | 162,96 | 163,82 | 5,85 x 5 | 15H7 | 134 | 50 x 9 |
| 55 | 165,99 | 166,75 | 5,85 x 5 | 15H7 | 137 | 50 x 9 |
| 56 | 169,03 | 169,79 | 5,85 x 5 | 15H7 | 140 | 50 x 9 |
| 57 | 172,06 | 172,82 | 5,85 x 5 | 15H7 | 143 | 50 x 9 |
| 58 | 175,09 | 175,85 | 5,85 x 5 | 15H7 | 145 | 50 x 9 |
| 59 | 178,12 | 178,88 | 5,85 x 5 | 15H7 | 146 | 50 x 9 |
| 60 | 181,15 | 181,91 | 5,85 x 5 | 15H7 | 152 | 50 x 9 |
| 61 | 184,19 | 184,95 | 5,85 x 5 | 15H7 | 155 | 50 x 9 |
| 62 | 187,22 | 187,98 | 5,85 x 5 | 15H7 | 157 | 50 x 9 |
| 63 | 190,25 | 191,01 | 5,85 x 5 | 15H7 | 160 | 50 x 9 |
| 64 | 193,28 | 194,04 | 5,85 x 5 | 15H7 | 163 | 50 x 9 |
| 65 | 196,31 | 197,07 | 5,85 x 5 | 15H7 | 166 | 50 x 9 |
| 66 | 199,35 | 200,11 | 5,85 x 5 | 15H7 | 170 | 50 x 9 |
| 67 | 202,38 | 203,14 | 5,85 x 5 | 15H7 | 172 | 50 x 9 |
| 68 | 205,41 | 206,17 | 5,85 x 5 | 15H7 | 175 | 50 x 9 |
| 69 | 208,44 | 209,20 | 5,85 x 5 | 15H7 | 178 | 50 x 9 |
| 70 | 211,47 | 212,23 | 5,85 x 5 | 15H7 | 181 | 50 x 9 |
| 71 | 214,50 | 215,27 | 5,85 x 5 | 15H7 | 184 | 50 x 9 |
| 72 | 217,53 | 218,30 | 5,85 x 5 | 15H7 | 187 | 50 x 9 |
| 73 | 220,57 | 221,33 | 5,85 x 5 | 15H7 | 190 | 50 x 9 |
| 74 | 223,60 | 224,36 | 5,85 x 5 | 15H7 | 193 | 50 x 9 |
| 75 | 226,63 | 227,39 | 5,85 x 5 | 15H7 | 196 | 50 x 9 |
| 76 | 229,66 | 230,42 | 5,85 x 5 | 15H7 | 200 | 50 x 9 |
| 77 | 232,70 | 233,46 | 5,85 x 5 | 15H7 | 202 | 50 x 9 |
| 78 | 235,73 | 236,49 | 5,85 x 5 | 15H7 | 205 | 50 x 9 |
| 79 | 238,76 | 239,52 | 5,85 x 5 | 15H7 | 208 | 50 x 9 |
| 80 | 241,79 | 242,55 | 5,85 x 5 | 15H7 | 211 | 50 x 9 |
| 81 | 244,82 | 245,58 | 5,85 x 5 | 15H7 | 215 | 50 x 9 |
| 82 | 247,86 | 248,62 | 5,85 x 5 | 15H7 | 218 | 50 x 9 |
| 83 | 250,89 | 251,65 | 5,85 x 5 | 15H7 | 221 | 50 x 9 |
| 84 | 253,92 | 254,68 | 5,85 x 5 | 15H7 | 224 | 50 x 9 |

| z | dk (mm) | do (mm) | ed (BxH) (mm) | dv (mm) | dmax (mm) | Hub (BxH) (mm) |
|---|---|---|---|---|---|---|
| 85 | 256,95 | 257,71 | 5,85 x 5 | 20H7 | 227 | 65 x 9 |
| 86 | 259,98 | 260,74 | 5,85 x 5 | 20H7 | 230 | 65 x 9 |
| 87 | 263,01 | 263,78 | 5,85 x 5 | 20H7 | 233 | 65 x 9 |
| 88 | 266,05 | 266,81 | 5,85 x 5 | 20H7 | 236 | 65 x 9 |
| 89 | 269,08 | 269,84 | 5,85 x 5 | 20H7 | 239 | 65 x 9 |
| 90 | 272,11 | 272,87 | 5,85 x 5 | 20H7 | 242 | 65 x 9 |
| 91 | 275,14 | 275,90 | 5,85 x 5 | 20H7 | 245 | 65 x 9 |
| 92 | 278,17 | 278,93 | 5,85 x 5 | 20H7 | 248 | 65 x 9 |
| 93 | 281,21 | 281,97 | 5,85 x 5 | 20H7 | 251 | 65 x 9 |
| 94 | 284,24 | 285,00 | 5,85 x 5 | 20H7 | 254 | 65 x 9 |
| 95 | 287,27 | 288,03 | 5,85 x 5 | 20H7 | 257 | 65 x 9 |
| 96 | 290,30 | 291,06 | 5,85 x 5 | 20H7 | 260 | 65 x 9 |
| 97 | 293,33 | 294,09 | 5,85 x 5 | 20H7 | 263 | 65 x 9 |
| 98 | 296,37 | 297,13 | 5,85 x 5 | 20H7 | 266 | 65 x 9 |
| 99 | 299,40 | 300,16 | 5,85 x 5 | 20H7 | 269 | 65 x 9 |
| 100 | 302,43 | 303,19 | 5,85 x 5 | 24H7 | 272 | 75 x 9 |
| 101 | 305,49 | 306,22 | 5,85 x 5 | 24H7 | 275 | 75 x 9 |
| 102 | 308,49 | 309,25 | 5,85 x 5 | 24H7 | 278 | 75 x 9 |
| 103 | 311,53 | 312,29 | 5,85 x 5 | 24H7 | 282 | 75 x 9 |
| 104 | 314,56 | 315,32 | 5,85 x 5 | 24H7 | 285 | 75 x 9 |
| 105 | 317,59 | 318,35 | 5,85 x 5 | 24H7 | 288 | 75 x 9 |
| 106 | 320,62 | 321,38 | 5,85 x 5 | 24H7 | 291 | 75 x 9 |
| 107 | 323,65 | 324,41 | 5,85 x 5 | 24H7 | 294 | 75 x 9 |
| 108 | 326,68 | 327,45 | 5,85 x 5 | 24H7 | 297 | 75 x 9 |
| 109 | 329,72 | 330,48 | 5,85 x 5 | 24H7 | 300 | 75 x 9 |
| 110 | 332,75 | 333,51 | 5,85 x 5 | 24H7 | 303 | 75 x 9 |
| 111 | 335,78 | 336,54 | 5,85 x 5 | 24H7 | 306 | 75 x 9 |
| 112 | 338,81 | 339,57 | 5,85 x 5 | 24H7 | 309 | 75 x 9 |
| 113 | 341,84 | 342,60 | 5,85 x 5 | 24H7 | 312 | 75 x 9 |
| 114 | 344,88 | 345,64 | 5,85 x 5 | 24H7 | 315 | 75 x 9 |

## Synchronising pulleys easy drive® for cylindrical bore Imperial-profile

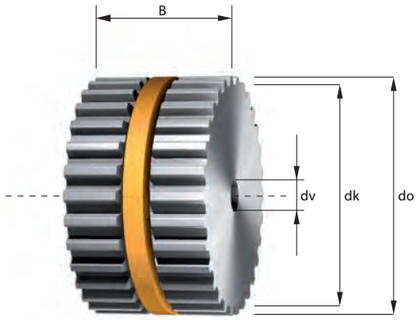


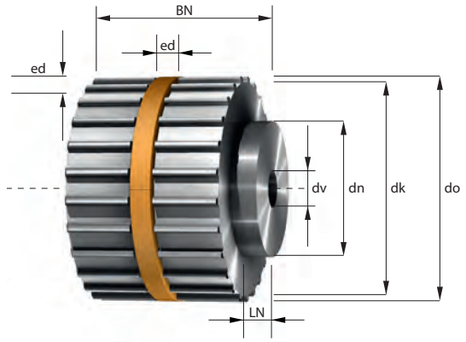


z = Number of teeth
dk = Outside diameter
do = Pitch diameter
ed = easy drive® groove
dv = Diameter of pre-bore
dmax = max. bore diameter without feather key groove
dh = Hub diameter
wh = Hub width

Min. diameter of the tension rollers without contra-flexure 60 mm, with contra-flexure 80 mm.

| Imperial code | | 075 | 100 | 150 | 200 | 300 | 400 | 600 |
|---|---|---|---|---|---|---|---|---|
| Belt width | = b (mm) | 19,1 | 25,4 | 38,1 | 50,8 | 76,2 | 101,6 | 152,4 |
| Total width | = B (mm) | 21,1 | 27,4 | 40,1 | 52,8 | 78,2 | 103,6 | 154,4 |
| Total width with hub | = BN (mm) | B + 10 / 8 / 11 / 16 mm | | | | | | |

Other widths and larger sizes are available.

### H (T1/2“)

| z | dk (mm) | do (mm) | ed (BxH) (mm) | dv (mm) | dmax (mm) | Hub (BxH) (mm) |
|---|---|---|---|---|---|---|
| 14 | 55,23 | 56,60 | 5,85 x 5 | 12H7 | 30 | 40 x 10 |
| 15 | 59,27 | 60,64 | 5,85 x 5 | 15H7 | 34 | 46 x 10 |
| 16 | 63,31 | 64,68 | 5,85 x 5 | 15H7 | 38 | 46 x 10 |
| 17 | 67,35 | 68,72 | 5,85 x 5 | 15H7 | 42 | 54 x 10 |
| 18 | 71,39 | 72,77 | 5,85 x 5 | 15H7 | 46 | 54 x 10 |
| 19 | 75,44 | 76,81 | 5,85 x 5 | 15H7 | 50 | 58 x 10 |
| 20 | 79,48 | 80,85 | 5,85 x 5 | 15H7 | 54 | 62 x 10 |
| 21 | 83,52 | 84,89 | 5,85 x 5 | 15H7 | 59 | 67 x 10 |
| 22 | 87,56 | 88,94 | 5,85 x 5 | 15H7 | 63 | 70 x 10 |
| 23 | 91,61 | 92,98 | 5,85 x 5 | 15H7 | 67 | 75 x 10 |
| 24 | 95,65 | 97,02 | 5,85 x 5 | 15H7 | 70 | 75 x 10 |
| 25 | 99,69 | 101,06 | 5,85 x 5 | 15H7 | 70 | 55 x 8 |
| 26 | 103,73 | 105,11 | 5,85 x 5 | 15H7 | 74 | 55 x 8 |
| 27 | 107,78 | 109,15 | 5,85 x 5 | 15H7 | 78 | 60 x 8 |
| 28 | 111,82 | 113,19 | 5,85 x 5 | 15H7 | 82 | 60 x 8 |

| z | dk (mm) | do (mm) | ed (BxH) (mm) | dv (mm) | dmax (mm) | Hub (BxH) (mm) |
|---|---|---|---|---|---|---|
| 29 | 115,86 | 117,23 | 5,85 x 5 | 15H7 | 86 | 60 x 8 |
| 30 | 119,90 | 121,28 | 5,85 x 5 | 15H7 | 90 | 70 x 8 |
| 31 | 123,95 | 125,32 | 5,85 x 5 | 20H7 | 94 | 70 x 8 |
| 32 | 127,99 | 129,36 | 5,85 x 5 | 20H7 | 98 | 70 x 8 |
| 33 | 132,03 | 133,40 | 5,85 x 5 | 20H7 | 102 | 80 x 8 |
| 34 | 136,08 | 137,45 | 5,85 x 5 | 20H7 | 106 | 80 x 8 |
| 35 | 140,12 | 141,49 | 5,85 x 5 | 20H7 | 110 | 80 x 8 |
| 36 | 144,16 | 145,53 | 5,85 x 5 | 20H7 | 114 | 80 x 8 |
| 37 | 148,20 | 149,57 | 5,85 x 5 | 20H7 | 118 | 80 x 8 |
| 38 | 152,25 | 153,62 | 5,85 x 5 | 20H7 | 122 | 80 x 8 |
| 39 | 156,29 | 157,66 | 5,85 x 5 | 20H7 | 125 | 80 x 8 |
| 40 | 160,33 | 161,70 | 5,85 x 5 | 20H7 | 125 | 80 x 8 |
| 41 | 164,37 | 165,74 | 5,85 x 5 | 20H7 | 129 | 80 x 8 |
| 42 | 168,42 | 169,79 | 5,85 x 5 | 20H7 | 133 | 80 x 8 |
| 43 | 172,46 | 173,83 | 5,85 x 5 | 20H7 | 137 | 80 x 8 |

= Standard ring sizes in stock



### H (T1/2“)

| z | dk (mm) | do (mm) | ed (BxH) (mm) | dv (mm) | dmax (mm) | Hub (BxH) (mm) |
|---|---|---|---|---|---|---|
| 44 | 176,50 | 177,87 | 5,85 x 5 | 20H7 | 142 | 80 x 8 |
| 45 | 180,54 | 181,91 | 5,85 x 5 | 20H7 | 146 | 80 x 8 |
| 46 | 184,59 | 185,96 | 5,85 x 5 | 20H7 | 150 | 80 x 8 |
| 47 | 188,63 | 190,00 | 5,85 x 5 | 20H7 | 154 | 80 x 8 |
| 48 | 192,67 | 194,04 | 5,85 x 5 | 20H7 | 158 | 80 x 8 |
| 49 | 196,71 | 198,08 | 5,85 x 5 | 20H7 | 162 | 80 x 11 |
| 50 | 200,76 | 202,13 | 5,85 x 5 | 20H7 | 166 | 80 x 11 |
| 51 | 204,80 | 206,17 | 5,85 x 5 | 20H7 | 170 | 80 x 11 |
| 52 | 208,84 | 210,21 | 5,85 x 5 | 20H7 | 174 | 80 x 11 |
| 53 | 212,88 | 214,25 | 5,85 x 5 | 20H7 | 178 | 80 x 11 |
| 54 | 216,93 | 218,30 | 5,85 x 5 | 20H7 | 182 | 80 x 11 |
| 55 | 220,97 | 222,34 | 5,85 x 5 | 20H7 | 186 | 80 x 11 |
| 56 | 225,01 | 226,38 | 5,85 x 5 | 20H7 | 190 | 80 x 11 |
| 57 | 229,05 | 230,42 | 5,85 x 5 | 20H7 | 194 | 80 x 11 |
| 58 | 233,10 | 234,47 | 5,85 x 5 | 20H7 | 198 | 80 x 11 |
| 59 | 237,14 | 238,51 | 5,85 x 5 | 20H7 | 202 | 80 x 11 |
| 60 | 241,18 | 242,55 | 5,85 x 5 | 20H7 | 206 | 80 x 11 |
| 61 | 245,22 | 246,59 | 5,85 x 5 | 20H7 | 210 | 80 x 11 |
| 62 | 249,27 | 250,64 | 5,85 x 5 | 20H7 | 214 | 80 x 11 |
| 63 | 253,31 | 254,68 | 5,85 x 5 | 20H7 | 218 | 80 x 11 |
| 64 | 257,35 | 258,72 | 5,85 x 5 | 20H7 | 222 | 80 x 11 |
| 65 | 261,39 | 262,76 | 5,85 x 5 | 20H7 | 226 | 80 x 11 |
| 66 | 265,44 | 266,81 | 5,85 x 5 | 20H7 | 230 | 80 x 11 |
| 67 | 269,48 | 270,85 | 5,85 x 5 | 20H7 | 234 | 80 x 11 |
| 68 | 273,52 | 274,89 | 5,85 x 5 | 20H7 | 239 | 80 x 11 |
| 69 | 277,56 | 278,93 | 5,85 x 5 | 20H7 | 243 | 80 x 11 |
| 70 | 281,61 | 282,98 | 5,85 x 5 | 20H7 | 247 | 80 x 11 |
| 71 | 285,65 | 287,02 | 5,85 x 5 | 20H7 | 251 | 80 x 11 |
| 72 | 289,69 | 291,06 | 5,85 x 5 | 20H7 | 255 | 80 x 11 |
| 73 | 293,73 | 295,11 | 5,85 x 5 | 20H7 | 259 | 80 x 11 |
| 74 | 297,78 | 299,15 | 5,85 x 5 | 20H7 | 263 | 80 x 11 |
| 75 | 301,82 | 303,19 | 5,85 x 5 | 20H7 | 267 | 80 x 11 |
| 76 | 305,86 | 307,23 | 5,85 x 5 | 20H7 | 271 | 80 x 11 |
| 77 | 309,90 | 311,28 | 5,85 x 5 | 20H7 | 275 | 80 x 11 |
| 78 | 313,95 | 315,32 | 5,85 x 5 | 20H7 | 279 | 80 x 11 |
| 79 | 317,99 | 319,36 | 5,85 x 5 | 20H7 | 283 | 80 x 11 |
| 80 | 322,03 | 323,40 | 5,85 x 5 | 20H7 | 287 | 80 x 11 |
| 81 | 326,07 | 327,45 | 5,85 x 5 | 20H7 | 291 | 80 x 11 |
| 82 | 330,12 | 331,49 | 5,85 x 5 | 20H7 | 295 | 80 x 11 |
| 83 | 334,16 | 335,53 | 5,85 x 5 | 20H7 | 299 | 80 x 11 |
| 84 | 338,20 | 339,57 | 5,85 x 5 | 20H7 | 303 | 80 x 11 |
| 85 | 342,24 | 343,62 | 5,85 x 5 | 20H7 | 307 | 80 x 11 |
| 86 | 346,29 | 347,66 | 5,85 x 5 | 20H7 | 311 | 80 x 11 |
| 87 | 350,33 | 351,70 | 5,85 x 5 | 20H7 | 315 | 80 x 11 |
| 88 | 354,37 | 355,74 | 5,85 x 5 | 20H7 | 319 | 80 x 11 |

| z | dk (mm) | do (mm) | ed (BxH) (mm) | dv (mm) | dmax (mm) | Hub (BxH) (mm) |
|---|---|---|---|---|---|---|
| 89 | 358,41 | 359,79 | 5,85 x 5 | 20H7 | 323 | 80 x 11 |
| 90 | 362,46 | 363,83 | 5,85 x 5 | 20H7 | 327 | 80 x 11 |
| 91 | 366,50 | 367,87 | 5,85 x 5 | 20H7 | 332 | 80 x 11 |
| 92 | 370,54 | 371,91 | 5,85 x 5 | 20H7 | 336 | 80 x 11 |
| 93 | 374,58 | 375,96 | 5,85 x 5 | 20H7 | 340 | 80 x 11 |
| 94 | 378,63 | 380,00 | 5,85 x 5 | 20H7 | 344 | 80 x 11 |
| 95 | 382,67 | 384,04 | 5,85 x 5 | 20H7 | 348 | 80 x 11 |
| 96 | 386,71 | 388,08 | 5,85 x 5 | 20H7 | 352 | 80 x 11 |
| 97 | 390,76 | 392,13 | 5,85 x 5 | 24H7 | 356 | 90 x 16 |
| 98 | 394,80 | 396,17 | 5,85 x 5 | 24H7 | 360 | 90 x 16 |
| 99 | 398,84 | 400,21 | 5,85 x 5 | 24H7 | 364 | 90 x 16 |
| 100 | 402,88 | 404,25 | 5,85 x 5 | 24H7 | 368 | 90 x 16 |
| 101 | 406,93 | 408,30 | 5,85 x 5 | 24H7 | 372 | 90 x 16 |
| 102 | 410,97 | 412,34 | 5,85 x 5 | 24H7 | 376 | 90 x 16 |
| 103 | 415,01 | 416,38 | 5,85 x 5 | 24H7 | 380 | 90 x 16 |
| 104 | 419,05 | 420,42 | 5,85 x 5 | 24H7 | 384 | 90 x 16 |
| 105 | 423,10 | 424,47 | 5,85 x 5 | 24H7 | 388 | 90 x 16 |
| 106 | 427,14 | 428,51 | 5,85 x 5 | 24H7 | 392 | 90 x 16 |
| 107 | 431,18 | 432,55 | 5,85 x 5 | 24H7 | 396 | 90 x 16 |
| 108 | 435,22 | 436,59 | 5,85 x 5 | 24H7 | 400 | 90 x 16 |
| 109 | 439,27 | 440,64 | 5,85 x 5 | 24H7 | 404 | 90 x 16 |
| 110 | 443,31 | 444,68 | 5,85 x 5 | 24H7 | 408 | 90 x 16 |
| 111 | 447,35 | 448,72 | 5,85 x 5 | 24H7 | 412 | 90 x 16 |
| 112 | 451,39 | 452,76 | 5,85 x 5 | 24H7 | 416 | 90 x 16 |
| 113 | 455,44 | 456,81 | 5,85 x 5 | 24H7 | 420 | 90 x 16 |
| 114 | 459,48 | 460,85 | 5,85 x 5 | 24H7 | 424 | 90 x 16 |

## Synchronising pulleys easy drive® for cylindrical bore Imperial-profile

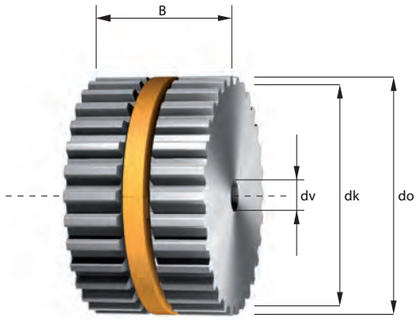


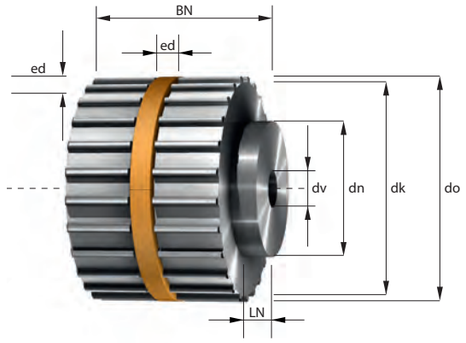


z = Number of teeth
dk = Outside diameter
do = Pitch diameter
ed = easy drive® groove
dv = Diameter of pre-bore
dmax = max. bore diameter without feather key groove
dh = Hub diameter
wh = Hub width

Min. diameter of the tension rollers without contra-flexure 150 mm, with contra-flexure 180 mm.

| Imperial code | | 100 | 150 | 200 | 300 | 400 | 600 | 600 |
|---|---|---|---|---|---|---|---|---|
| Belt width | = b (mm) | 25,4 | 38,1 | 50,8 | 76,2 | 101,6 | 152,4 | 152,4 |
| Total width | = B (mm) | 27,4 | 40,1 | 52,8 | 78,2 | 103,6 | 154,4 | 154,4 |
| Total width with hub | = BN (mm) | B + 18 / 15 mm | | | | | | |

Other widths and larger sizes are available.

### XH (T7/8“)

| z | dk (mm) | do (mm) | ed (BxH) (mm) | dv (mm) | dmax (mm) | Hub (BxH) (mm) |
|---|---|---|---|---|---|---|
| 18 | 124,55 | 127,34 | * | 20H7 | 95 | 85 x 18 |
| 19 | 131,62 | 134,41 | * | 20H7 | 102 | 95 x 18 |
| 20 | 138,69 | 141,49 | * | 20H7 | 109 | 95 x 18 |
| 21 | 145,77 | 148,56 | * | 20H7 | 116 | 110 x 18 |
| 22 | 152,84 | 155,64 | * | 20H7 | 123 | 110 x 18 |
| 23 | 159,92 | 162,71 | * | 20H7 | 130 | 125 x 18 |
| 24 | 166,99 | 169,79 | * | 25H7 | 137 | 125 x 18 |
| 25 | 174,07 | 176,86 | * | 25H7 | 144 | 140 x 18 |
| 26 | 181,14 | 183,94 | * | 25H7 | 151 | 140 x 18 |
| 27 | 188,22 | 191,01 | * | 25H7 | 158 | 120 x 18 |
| 28 | 195,29 | 198,08 | * | 25H7 | 168 | 120 x 18 |
| 29 | 202,37 | 205,16 | * | 25H7 | 172 | 120 x 18 |
| 30 | 209,44 | 212,23 | * | 25H7 | 179 | 120 x 18 |
| 31 | 216,52 | 219,31 | * | 25H7 | 187 | 130 x 18 |
| 32 | 223,59 | 226,38 | * | 25H7 | 194 | 130 x 18 |

| z | dk (mm) | do (mm) | ed (BxH) (mm) | dv (mm) | dmax (mm) | Hub (BxH) (mm) |
|---|---|---|---|---|---|---|
| 33 | 230,67 | 233,46 | * | 25H7 | 201 | 140 x 18 |
| 34 | 237,74 | 240,53 | * | 25H7 | 208 | 140 x 18 |
| 35 | 244,81 | 247,61 | * | 25H7 | 215 | 140 x 18 |
| 36 | 251,89 | 254,68 | * | 25H7 | 222 | 140 x 18 |
| 37 | 258,96 | 261,75 | * | 25H7 | 229 | 140 x 18 |
| 38 | 266,04 | 268,83 | * | 25H7 | 236 | 140 x 18 |
| 39 | 273,11 | 275,90 | * | 25H7 | 243 | 140 x 18 |
| 40 | 280,18 | 282,98 | * | 25H7 | 250 | 140 x 18 |
| 41 | 287,26 | 290,05 | * | 30H7 | 257 | 150 x 15 |
| 42 | 294,34 | 297,13 | * | 30H7 | 264 | 150 x 15 |
| 43 | 301,41 | 304,20 | * | 30H7 | 271 | 150 x 15 |
| 44 | 308,48 | 311,28 | * | 30H7 | 278 | 150 x 15 |
| 45 | 315,56 | 318,35 | * | 30H7 | 286 | 150 x 15 |
| 46 | 322,63 | 325,42 | * | 30H7 | 293 | 150 x 15 |
| 47 | 329,71 | 332,50 | * | 30H7 | 300 | 150 x 15 |

* On request



### XH (T7/8“)

| z | dk (mm) | do (mm) | ed (BxH) (mm) | dv (mm) | dmax (mm) | Hub (BxH) (mm) |
|---|---|---|---|---|---|---|
| 48 | 336,78 | 339,57 | * | 30H7 | 307 | 150 x 15 |
| 49 | 343,86 | 346,35 | * | 30H7 | 314 | 150 x 15 |
| 50 | 350,93 | 353,72 | * | 30H7 | 321 | 150 x 15 |
| 51 | 358,08 | 360,80 | * | 30H7 | 328 | 150 x 15 |
| 52 | 365,08 | 367,87 | * | 30H7 | 335 | 150 x 15 |
| 53 | 372,15 | 374,95 | * | 30H7 | 342 | 150 x 15 |
| 54 | 379,23 | 382,02 | * | 30H7 | 349 | 150 x 15 |
| 55 | 386,30 | 389,09 | * | 30H7 | 356 | 150 x 15 |
| 56 | 393,38 | 396,17 | * | 30H7 | 363 | 150 x 15 |
| 57 | 400,45 | 403,24 | * | 30H7 | 370 | 150 x 15 |
| 58 | 407,53 | 410,32 | * | 30H7 | 378 | 150 x 15 |
| 59 | 414,60 | 417,39 | * | 30H7 | 385 | 150 x 15 |
| 60 | 421,67 | 424,47 | * | 30H7 | 392 | 150 x 15 |
| 61 | 428,75 | 431,54 | * | 40H7 | 399 | 150 x 15 |
| 62 | 435,82 | 438,62 | * | 40H7 | 406 | 150 x 15 |
| 63 | 442,90 | 445,69 | * | 40H7 | 413 | 150 x 15 |
| 64 | 449,97 | 452,76 | * | 40H7 | 420 | 150 x 15 |
| 65 | 457,05 | 459,84 | * | 40H7 | 427 | 150 x 15 |
| 66 | 464,12 | 466,91 | * | 40H7 | 434 | 150 x 15 |
| 67 | 471,20 | 473,99 | * | 40H7 | 441 | 150 x 15 |
| 68 | 478,27 | 481,06 | * | 40H7 | 448 | 150 x 15 |
| 69 | 485,35 | 488,14 | * | 40H7 | 455 | 150 x 15 |
| 70 | 492,42 | 495,21 | * | 40H7 | 462 | 150 x 15 |
| 71 | 499,49 | 502,29 | * | 40H7 | 469 | 150 x 15 |
| 72 | 506,57 | 509,36 | * | 40H7 | 477 | 150 x 15 |
| 73 | 513,64 | 516,43 | * | 40H7 | 484 | 160 x 15 |
| 74 | 520,72 | 523,51 | * | 40H7 | 491 | 160 x 15 |
| 75 | 527,79 | 530,58 | * | 40H7 | 498 | 160 x 15 |
| 76 | 534,87 | 537,66 | * | 40H7 | 505 | 160 x 15 |
| 77 | 541,94 | 544,73 | * | 40H7 | 512 | 160 x 15 |
| 78 | 549,01 | 551,81 | * | 40H7 | 519 | 160 x 15 |
| 79 | 556,09 | 558,88 | * | 40H7 | 526 | 160 x 15 |
| 80 | 563,16 | 565,95 | * | 40H7 | 533 | 160 x 15 |
| 81 | 570,24 | 573,03 | * | 40H7 | 540 | 160 x 15 |
| 82 | 577,31 | 580,10 | * | 40H7 | 547 | 160 x 15 |
| 83 | 584,39 | 587,18 | * | 40H7 | 554 | 160 x 15 |
| 84 | 591,46 | 594,25 | * | 40H7 | 561 | 160 x 15 |
| 85 | 598,54 | 601,33 | * | 40H7 | 569 | 160 x 15 |
| 86 | 605,61 | 608,40 | * | 40H7 | 576 | 160 x 15 |
| 87 | 612,68 | 615,48 | * | 40H7 | 583 | 160 x 15 |
| 88 | 619,76 | 622,55 | * | 40H7 | 590 | 160 x 15 |
| 89 | 626,83 | 629,62 | * | 40H7 | 597 | 160 x 15 |
| 90 | 633,91 | 636,70 | * | 40H7 | 604 | 160 x 15 |
| 91 | 640,98 | 643,77 | * | 40H7 | 611 | 160 x 15 |
| 92 | 648,06 | 650,85 | * | 40H7 | 618 | 160 x 15 |

| z | dk (mm) | do (mm) | ed (BxH) (mm) | dv (mm) | dmax (mm) | Hub (BxH) (mm) |
|---|---|---|---|---|---|---|
| 93 | 655,13 | 657,92 | * | 40H7 | 625 | 160 x 15 |
| 94 | 662,21 | 665,00 | * | 40H7 | 632 | 160 x 15 |
| 95 | 669,27 | 672,07 | * | 40H7 | 639 | 160 x 15 |
| 96 | 676,35 | 679,15 | * | 40H7 | 646 | 160 x 15 |
| 97 | 683,44 | 686,22 | * | 40H7 | 653 | 160 x 15 |
| 98 | 690,50 | 693,29 | * | 40H7 | 660 | 160 x 15 |
| 99 | 697,59 | 700,37 | * | 40H7 | 668 | 160 x 15 |
| 100 | 704,65 | 707,44 | * | 40H7 | 675 | 160 x 15 |
| 101 | 711,74 | 714,52 | * | 40H7 | 682 | 160 x 15 |
| 102 | 718,80 | 721,59 | * | 40H7 | 689 | 160 x 15 |
| 103 | 725,88 | 728,67 | * | 40H7 | 696 | 160 x 15 |
| 104 | 732,95 | 735,74 | * | 40H7 | 703 | 160 x 15 |
| 105 | 740,03 | 742,82 | * | 40H7 | 710 | 160 x 15 |
| 106 | 747,09 | 749,89 | * | 40H7 | 717 | 160 x 15 |
| 107 | 754,18 | 756,96 | * | 40H7 | 724 | 160 x 15 |
| 108 | 761,24 | 764,04 | * | 40H7 | 731 | 160 x 15 |
| 109 | 768,33 | 771,11 | * | 40H7 | 738 | 160 x 15 |
| 110 | 775,39 | 778,19 | * | 40H7 | 745 | 160 x 15 |
| 111 | 782,48 | 785,26 | * | 40H7 | 752 | 160 x 15 |
| 112 | 789,54 | 792,34 | * | 40H7 | 760 | 160 x 15 |
| 113 | 796,62 | 799,41 | * | 40H7 | 767 | 160 x 15 |
| 114 | 803,68 | 806,49 | * | 40H7 | 774 | 160 x 15 |

## Materials

| Description | Material no. | Properties | Tensile strength (N/mm²) | Yield strength (N/mm²) |
|---|---|---|---|---|
| Non-ferrous metals (Al) | | | | |
| AlCUMgPb<br>AlCuMgPbMgMn | 3.1645<br>2007 | Good machinability | ca. 350 | ca. 230 |
| AlMgSi1<br>AlSiMgMn | 3.2315<br>6082 | Corrosion-resistant, salt-water resistant, weldable, good for anodizing | ca. 280 | ca .230 |
| AlZnMgCu1,5<br>AlZn5,5MgCu | 3.4365<br>7075 | Extremely high strength,<br>good for anodizing | ca. 510 | ca. 440 |
| AlSiMgBi | 6026 | salt-water resistant, RoHs conform,<br>good for anodizing | ca. 310 | ca. 240 |
| Steel (St) | | | | |
| C45 | 1.0503 | Standard | 590 - 740 | ca. 350 |
| 9 SMnPb28 (11Sn30)<br>(bis 100 mm) | 1.0718 | Good machinability, hardenable to a limited extent | ca. 350 | ca. 205 |
| X10CrNiS18 9 | 1.4305 | Rust-resistant, good machinability | 500 - 700 | |
| Grey cast iron | | | | |
| GG25 | EN-JL 1040 | Corrosion-resistant | 250 - 350 | 165 |

| Description | Trade name | Properties | Tensile strength (N/mm2) |
|---|---|---|---|
| Plastics | | | |
| PA6 (polyamide) | Ultramid, Rilsan | high stiffness, chemical resistant | 50 - 84 |
| PA12C (cast polyamide) | Lauramid, Hawamid | wear-resistant, hydrolysis resistant | 60 |
| POM (polyoxymethylene) | Delrin, Hostaform | Good machinability | 55 - 62 |





## Surface treatment / finishing of pulleys

| Description | Layer thickness in µm (10-3 mm) | Tolerance in µm | |
|---|---|---|---|
| Metal coatings | | | |
| Electro-galvanize | 20 | +/- 10 | Steel |
| Nickel-plating chemical | 10-30 | +/- 3 | AL/Steel |
| Plating takes place in heated acid electrolytes. Good protection against corrosion only with an absolutely impenetrable coating having a thickness of min. 25 µm on iron. Good hard surface. | | | |
| Nickel-plating galvanic | 10-30 | +/- 10 | AL/Steel |
| Plating takes place in heated acid electrolytes. Good protection against corrosion only with an absolutely impenetrable coating having a thickness of min. 25 µm on iron. Good hard surface. | | | |
| Chromating, blue galvanic | | | Steel |
| Subsequent treatment of electro-galvanized coating by dipping in solutions of sodium chromate and sulphuric acid 1/7 µm, e.g. when there is saltwater contact. | | | |
| Hard chromium plating | up to 100 | +/- 5 | Steel |
| Non-metal coatings | | | |
| Bronzing | 1 - 2 | | Steel |
| Iron is dipped into heated sodium hydrate, alkaline or sulphate lye;<br>afterwards, the product is repeatedly rubbed with oil or wax. Low corrosion resistance. | | | |
| Phosphatizing | 5 - 12 | +/- 3 | Steel |
| Phosphate layers are created by dipping the workpiece into phosphoric acid solutions of heavy or alkali metals (see also bonderizing). | | | |
| Anodizing | 10 -25 | | AL |
| An oxide layer is created by electric oxidation on Al, Mg, Zn or alloy. | | | |
| Hard anodizing | 30 - 40 | +/- 5 | AL |
| Hard coating | ‹40<br>›40 | +/- 5<br>+/- 10 | |

Taperlock clampings are the standardized, commercially available machine parts for creating non-positive shaft-to-hub connections with a pulley. The conically slotted bushing with feather key groove according to DIN 6885 serves to fasten pulleys to shafts or journals.

Taperlock clampings are available in different outside dimensions. A large number of bore sizes are available for each outside dimension, i.e. for the corresponding shaft diameter. The 4-digit number refers to the outside dimension, the 2-digit number indicates the bore size.

| | Taperlock bushing, material EN-GJL 200 – DIN EN 1561 | | | | | | | | | | | | | | | |
|---|---|---|---|---|---|---|---|---|---|---|---|---|---|---|---|---|
| | 1008 | 1108 | 1210 | 1215 | 1310 | 1610 | 1615 | 2012 | 2517 | 3020 | 3030 | 3525 | 3535 | 4040 | 4545 | 5050 |
| Ø bore mm | 10 | 10 | 11 | 11 | 14 | 14 | 14 | 14 | 16 | 25 | 35 | 35 | 35 | 40 | 55 | 70 |
| | 11 | 11 | 12 | 12 | 16 | 16 | 16 | 16 | 18 | 28 | 38 | 38 | 38 | 42 | 60 | 75 |
| | 12 | 12 | 14 | 14 | 18 | 18 | 18 | 18 | 19 | 30 | 40 | 40 | 40 | 45 | 65 | 80 |
| | 14 | 14 | 16 | 16 | 19 | 19 | 19 | 19 | 20 | 32 | 42 | 42 | 42 | 48 | 70 | 85 |
| | 16 | 16 | 18 | 18 | 20 | 20 | 20 | 20 | 22 | 35 | 45 | 45 | 45 | 50 | 75 | 90 |
| | 18 | 18 | 19 | 19 | 22 | 22 | 22 | 22 | 24 | 38 | 48 | 48 | 48 | 55 | 80 | 95 |
| | 19 | 19 | 20 | 20 | 24 | 24 | 24 | 24 | 25 | 40 | 50 | 50 | 50 | 60 | 85 | 100 |
| | 20 | 20 | 22 | 22 | 25 | 25 | 25 | 25 | 28 | 42 | 55 | 55 | 55 | 65 | 90 | 105 |
| | 22 | 22 | 24 | 24 | 28 | 28 | 28 | 28 | 30 | 45 | 60 | 60 | 60 | 70 | 95 | 110 |
| | 24* | 24 | 25 | 25 | 30 | 30 | 30 | 30 | 32 | 48 | 65 | 65 | 65 | 75 | 100 | 115 |
| | 25* | 25 | 28 | 28 | 32 | 32 | 32 | 32 | 35 | 50 | 70 | 70 | 70 | 80 | 105 | 120 |
| | | 28* | 30 | 30 | 35 | 35 | 35 | 35 | 38 | 55 | 75 | 75 | 75 | 85 | 110 | 125 |
| | | | 32 | 32 | | 38 | 38 | 38 | 40 | 60 | | 80 | 80 | 90 | | |
| | | | | | | 40 | 40 | 40 | 42 | 65 | | 85 | 85 | 95 | | |
| | | | | | | 42* | 42* | 42 | 45 | 70 | | 90 | 90 | 100 | | |
| | | | | | | | | 45 | 48 | 75 | | | | | | |
| | | | | | | | | 48 | 50 | | | | | | | |
| | | | | | | | | 50 | 55 | | | | | | | |
| | | | | | | | | | 60 | | | | | | | |
| Hexagon socket screw (inch) | 1/4 x 1/2 | 1/4 x 1/2 | 3/8 x 5/8 | 3/8 x 5/8 | 3/8 x 5/8 | 3/8 x 5/8 | 3/8 x 5/8 | 7/16 x 7/8 | 1/2 x 1 | 5/8 x 11/4 | 5/8 x 11/4 | 1/2 x 11/2 | 1/2 x 11/2 | 5/8 x 13/4 | 3/4 x 2 | 7/8 x 21/4 |
| Tightening (Nm) | 5,7 | 5,7 | 20 | 20 | 20 | 20 | 20 | 31 | 49 | 92 | 92 | 115 | 115 | 172 | 195 | 275 |
| Bushing length (mm) | 22,3 | 22,3 | 25,4 | 38,1 | 25,4 | 25,4 | 38,1 | 31,8 | 44,5 | 50,8 | 76,2 | 63,5 | 88,9 | 101,6 | 114,3 | 127,0 |
| Weight for d2 min. | 0,12 | 0,16 | 0,28 | 0,39 | 0,32 | 0,41 | 0,60 | 0,75 | 1,06 | 2,50 | 3,75 | 3,90 | 5,13 | 7,68 | 12,70 | 15,17 |

* This bore has a flat groove.

Pulleys can be fastened to cylindrical shafts or journals safely, flexibly and, above all, economically with BOQA clamping bushings.

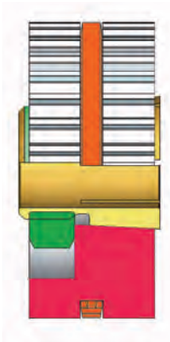

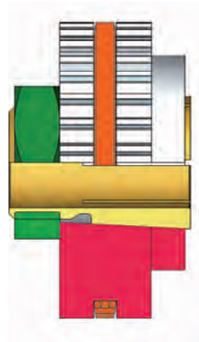

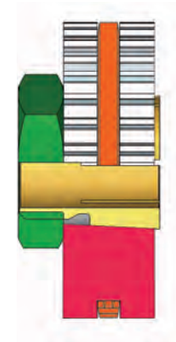

Shaft-to-hub connections with BOQA fastening elements are:

| | |
|---|---|
| SAFE | - non-positive, backlash-free and highly precise fastening of pulleys |
| FAST | - marked gain in time needed for assembly |
| FLEXIBLE | - wide range of applicability, high delivery standard |
| ECONOMICAL | - reduction in costs |
| SPACE-SAVING | - extremely compact, no overhang |
| NON-CORROSIVE | - made predominantly of stainless steel |

Shaft-to-hub connections with BOQA fastening elements are insensitive to extreme load alternations. They can be easily adjusted axially and radially, are easy to mount and dismount. Any additional forming of the shaft or other adjustment work will not be necessary.

BOQA fastening elements can be delivered starting from a shaft diameter of 2.00 mm – also in inches. In view of the large standard product range, BOQA fastening elements also can be adapted to fulfill your requirements.

Simply the better solution.

| Bushing | Article | Shaft Ø | Hub width max. | Taper Ø d2 | Length taper | Length element | Taper ratio | Taper angle | Thread | Key width | Nut height | Tigh-tening torque | Transmission values | | | | |
|---|---|---|---|---|---|---|---|---|---|---|---|---|---|---|---|---|---|
| | | | | | | | | | | | | | Torque | | | Shearing force | Hub load |
| | | mm | mm | mm | Lk | Le | C = 1:x | a | M (x) | SW | mm | Nm | Kpm | Nm | Kpm | kN | N/mm² |
| BO-QA02 | 10011 | 2,00 | 7,50 | 4,70 | 5,20 | 10,00 | 1:10 | 5,725 | M4 | 7 | 2,10 | 2,50 | 0,25 | 2,43 | 0,25 | 0,5890 | 184,07 |
| BO-QA03 | 10015 | 3,00 | 7,50 | 6,00 | 5,20 | 10,10 | 1:10 | 5,725 | M5 | 8 | 2,60 | 3,00 | 0,31 | 2,91 | 0,30 | 0,7069 | 142,38 |
| BO-QA04 | 10018 | 4,00 | 7,50 | 6,80 | 5,40 | 9,80 | 1:10 | 5,725 | M6 x 0,5 | 8 | 2,50 | 5,00 | 0,51 | 4,85 | 0,49 | 1,1781 | 120,52 |
| BO-QA04 | 10019 | 4,00 | 8,30 | 6,80 | 5,60 | 10,80 | 1:10 | 5,725 | M6 x 0,5 | 8 | 2,50 | 6,00 | 0,61 | 5,82 | 0,59 | 1,1780 | 116,39 |
| BO-QA04 | 10024-4 | 4,00 | 16,00 | 9,50 | 9,40 | 18,80 | 1:10 | 5,725 | M8 x 1 | 10 | 3,00 | 6,30 | 0,64 | 6,11 | 0,62 | 0,7068 | 50,07 |
| BO-QA04 | 10024-4z | 4,00 | 16,00 | 9,50 | 9,40 | 18,80 | 1:10 | 5,725 | M8 x 1 | 10 | 3,00 | 6,30 | 0,64 | 6,11 | 0,62 | 0,7068 | 50,07 |
| BO-QA05 | 10023 | 5,00 | 9,00 | 9,50 | 6,20 | 12,30 | 1:10 | 5,725 | M8 x 1 | 10 | 3,00 | 7,00 | 0,71 | 6,79 | 0,69 | 0,8247 | 74,58 |
| BO-QA05 | 11023 | 5,00 | 12,00 | 9,50 | 7,50 | 14,80 | 1:10 | 5,725 | M8 x 1 | 10 | 3,00 | 7,00 | 0,71 | 6,79 | 0,69 | 0,8247 | 62,10 |
| BO-QA05 | 10024 | 5,00 | 16,00 | 9,50 | 9,40 | 18,80 | 1:10 | 5,725 | M8 x 1 | 10 | 3,00 | 7,00 | 0,71 | 6,79 | 0,69 | 0,8247 | 50,07 |
| BO-QA05 | 10024-5z | 5,00 | 16,00 | 9,50 | 9,40 | 18,80 | 1:10 | 5,725 | M8 x 1 | 10 | 3,00 | 7,00 | 0,71 | 6,79 | 0,69 | 0,8247 | 50,07 |
| BO-QA05 | 11025 | 5,00 | 9,00 | 11,30 | 6,50 | 14,00 | 1:10 | 5,725 | M10 x 1 | 13 | 3,50 | 7,00 | 0,71 | 6,79 | 0,69 | 0,8247 | 59,57 |
| BO-QA05 | 10128 | 5,00 | 12,00 | 11,30 | 7,70 | 16,60 | 1:10 | 5,725 | M10 x 1 | 13 | 3,50 | 7,00 | 0,71 | 6,79 | 0,69 | 0,8247 | 50,57 |
| BO-QA05 | 10129 | 5,00 | 16,00 | 11,30 | 11,50 | 22,00 | 1:10 | 5,725 | M10 x 1 | 13 | 3,50 | 7,00 | 0,71 | 6,79 | 0,69 | 0,8249 | 34,46 |
| BO-QA06 | 11130 | 6,00 | 9,00 | 11,30 | 6,50 | 14,00 | 1:10 | 5,725 | M10 x 1 | 13 | 3,50 | 8,00 | 0,81 | 7,76 | 0,79 | 0,9425 | 59,57 |
| BO-QA06 | 10132 | 6,00 | 12,00 | 11,30 | 7,70 | 16,60 | 1:10 | 5,725 | M10 x 1 | 13 | 3,50 | 8,20 | 0,83 | 7,95 | 0,81 | 0,9660 | 50,56 |
| BO-QA06 | 10133 | 6,00 | 16,00 | 11,30 | 11,50 | 22,00 | 1:10 | 5,725 | M10 x 1 | 13 | 3,50 | 8,40 | 0,85 | 8,15 | 0,83 | 0,9896 | 34,45 |
| BO-QA06 | 10134 | 6,00 | 22,00 | 11,30 | 11,50 | 26,00 | 1:10 | 5,725 | M10 x 1 | 13 | 3,50 | 8,60 | 0,87 | 8,34 | 0,85 | 1,0132 | 34,45 |
| BO-QA06 | 10136 | 6,00 | 12,00 | 13,60 | 8,60 | 16,00 | 1:10 | 5,725 | M12 x 1,25 | 19 | 6,00 | 8,00 | 0,81 | 7,76 | 0,79 | 0,7540 | 37,52 |
| BO-QA06 | 10137 | 6,00 | 16,00 | 13,60 | 12,00 | 22,00 | 1:10 | 5,725 | M12 x 1,25 | 19 | 6,00 | 8,20 | 0,83 | 7,95 | 0,81 | 0,7728 | 27,24 |
| BO-QA06 | 10138 | 6,00 | 22,00 | 13,60 | 14,00 | 26,00 | 1:10 | 5,725 | M12 x 1,25 | 19 | 6,00 | 8,40 | 0,85 | 8,15 | 0,83 | 0,7917 | 23,53 |
| BO-QA06 | 10140 | 6,00 | 16,00 | 16,10 | 10,80 | 21,50 | 1:10 | 5,725 | M14 x 1,5 | 19 | 5,00 | 10,00 | 1,02 | 9,70 | 0,99 | 0,7854 | 25,28 |
| BO-QA06 | 10141 | 6,00 | 22,00 | 16,10 | 14,10 | 26,80 | 1:10 | 5,725 | M14 x 1,5 | 19 | 5,00 | 12,00 | 1,22 | 11,64 | 1,18 | 0,9425 | 19,57 |
| BO-QA06 | 10142 | 6,00 | 26,00 | 16,10 | 16,20 | 31,00 | 1:10 | 5,725 | M14 x 1,5 | 19 | 5,00 | 14,00 | 1,42 | 13,58 | 1,38 | 1,0996 | 17,15 |
| BO-QA06 | 10143 | 6,00 | 16,00 | 18,10 | 11,50 | 21,90 | 1:10 | 5,725 | M16 x 1,5 | 22 | 6,00 | 10,00 | 1,02 | 9,70 | 0,99 | 0,7854 | 21,08 |
| BO-QA06 | 10144 | 6,00 | 22,00 | 18,10 | 14,10 | 27,60 | 1:10 | 5,725 | M16 x 1,5 | 22 | 6,00 | 12,00 | 1,22 | 11,64 | 1,18 | 0,9425 | 17,33 |
| BO-QA07 | 11077 | 7,00 | 9,00 | 11,30 | 6,50 | 14,00 | 1:10 | 5,725 | M10 x 1 | 13 | 3,50 | 10,00 | 1,02 | 9,70 | 0,99 | 1,1781 | 59,57 |
| BO-QA07 | 10146 | 7,00 | 12,00 | 11,30 | 7,70 | 16,60 | 1:10 | 5,725 | M10 x 1 | 13 | 3,50 | 10,20 | 1,04 | 9,89 | 1,01 | 1,2017 | 50,56 |
| BO-QA07 | 10147 | 7,00 | 16,00 | 11,30 | 11,50 | 22,00 | 1:10 | 5,725 | M10 x 1 | 13 | 3,50 | 10,40 | 1,06 | 10,09 | 1,03 | 1,2252 | 34,45 |
| BO-QA07 | 10148 | 7,00 | 22,00 | 11,30 | 11,50 | 26,00 | 1:10 | 5,725 | M10 x 1 | 13 | 3,50 | 10,60 | 1,08 | 10,28 | 1,05 | 1,2488 | 34,45 |
| BO-QA07 | 10150 | 7,00 | 12,00 | 13,60 | 8,60 | 16,00 | 1:10 | 5,725 | M12 x 1,25 | 19 | 5,90 | 10,00 | 1,02 | 9,70 | 0,99 | 0,9425 | 37,52 |
| BO-QA07 | 10151 | 7,00 | 16,00 | 13,60 | 12,00 | 22,00 | 1:10 | 5,725 | M12 x 1,25 | 19 | 5,90 | 10,20 | 1,04 | 9,89 | 1,01 | 0,9613 | 27,24 |
| BO-QA07 | 10152 | 7,00 | 22,00 | 13,60 | 14,00 | 26,00 | 1:10 | 5,725 | M12 x 1,25 | 19 | 5,90 | 10,40 | 1,06 | 10,09 | 1,03 | 0,9802 | 23,53 |
| BO-QA07 | 10154 | 7,00 | 16,00 | 16,10 | 10,80 | 21,50 | 1:10 | 5,725 | M14 x 1,5 | 19 | 5,00 | 12,00 | 1,22 | 11,64 | 1,18 | 0,9425 | 25,28 |
| BO-QA07 | 10155 | 7,00 | 22,00 | 16,10 | 14,10 | 26,80 | 1:10 | 5,725 | M14 x 1,5 | 19 | 5,00 | 14,00 | 1,42 | 13,58 | 1,38 | 1,0995 | 19,57 |
| BO-QA07 | 10156 | 7,00 | 26,00 | 16,10 | 16,20 | 31,00 | 1:10 | 5,725 | M14 x 1,5 | 19 | 5,00 | 16,00 | 1,63 | 15,52 | 1,58 | 1,2566 | 17,15 |
| BO-QA07 | 10157 | 7,00 | 16,00 | 18,10 | 11,50 | 21,90 | 1:10 | 5,725 | M16 x 1,5 | 22 | 6,00 | 12,00 | 1,22 | 11,64 | 1,18 | 0,9425 | 21,09 |
| BO-QA07 | 10158 | 7,00 | 22,00 | 18,10 | 14,10 | 27,60 | 1:10 | 5,725 | M16 x 1,5 | 22 | 6,00 | 14,00 | 1,42 | 13,58 | 1,38 | 1,0966 | 17,33 |
| BO-QA08 | 10160 | 8,00 | 12,00 | 13,60 | 8,60 | 16,00 | 1:10 | 5,725 | M12 x 1,25 | 19 | 5,90 | 12,00 | 1,22 | 11,64 | 1,18 | 1,1310 | 37,52 |
| BO-QA08 | 10160-II | 8,00 | 12,00 | 13,60 | 8,60 | 16,00 | 1:10 | 5,725 | M12 x 1 | 15 | 4,00 | 12,00 | 1,22 | 11,64 | 1,18 | 1,1310 | 37,52 |
| BO-QA08 | 10161 | 8,00 | 16,00 | 13,60 | 9,60 | 22,00 | 1:10 | 5,725 | M12 x 1,25 | 19 | 5,90 | 12,40 | 1,26 | 12,03 | 1,22 | 1,2252 | 27,24 |
| BO-QA08 | 10162 | 8,00 | 22,00 | 13,60 | 9,60 | 26,00 | 1:10 | 5,725 | M12 x 1,25 | 19 | 5,90 | 14,00 | 1,42 | 13,58 | 1,38 | 1,2260 | 26,95 |
| BO-QA08 | 10164 | 8,00 | 16,00 | 16,10 | 10,80 | 21,50 | 1:10 | 5,725 | M14 x 1,5 | 19 | 5,00 | 13,00 | 1,32 | 12,61 | 1,28 | 1,0210 | 25,28 |
| BO-QA08 | 10165 | 8,00 | 22,00 | 16,10 | 14,10 | 26,80 | 1:10 | 5,725 | M14 x 1,5 | 19 | 5,00 | 15,00 | 1,53 | 14,55 | 1,48 | 1,1781 | 19,57 |
| BO-QA08 | 10166-S | 8,00 | 26,00 | 16,10 | 16,20 | 31,00 | 1:10 | 5,725 | M14 x 1,5 | 19 | 5,00 | 17,00 | 1,73 | 16,49 | 1,68 | 1,3352 | 17,15 |
| BO-QA08 | 10166-L | 8,00 | 30,00 | 16,10 | 16,20 | 35,80 | 1:10 | 5,725 | M14 x 1,5 | 19 | 5,00 | 19,00 | 1,93 | 18,43 | 1,87 | 1,4923 | 17,15 |
| BO-QA08 | 10167 | 8,00 | 16,00 | 18,10 | 11,50 | 21,90 | 1:10 | 5,725 | M16 x 1,5 | 22 | 6,00 | 14,00 | 1,42 | 13,58 | 1,38 | 1,0996 | 21,09 |
| BO-QA08 | 10168 | 8,00 | 22,00 | 18,10 | 14,10 | 27,60 | 1:10 | 5,725 | M16 x 1,5 | 22 | 6,00 | 16,00 | 1,63 | 15,52 | 1,58 | 1,2566 | 17,33 |
| BO-QA08 | 10169 | 8,00 | 30,00 | 18,10 | 16,50 | 36,90 | 1:10 | 5,725 | M16 x 1,5 | 22 | 6,00 | 18,00 | 1,83 | 17,46 | 1,78 | 1,4137 | 14,90 |
| BO-QA08 | 10035-8 | 8,00 | 30,00 | 23,50 | 22,20 | 40,85 | 1:10 | 5,725 | M20 x 1,5 | 27 | 8,00 | 20,00 | 2,03 | 19,40 | 1,97 | 1,5708 | 8,55 |

| Bushing | Article | Shaft Ø | Hub width max. | Taper Ø d2 | Length taper | Length element | Taper ratio | Taper angle | Thread | Key width | Nut height | Tigh-tening torque | Transmission values | | | | |
|---|---|---|---|---|---|---|---|---|---|---|---|---|---|---|---|---|---|
| | | | | | | | | | | | | | Torque | | | Shearing force | Hub load |
| | | mm | mm | mm | Lk | Le | C = 1:x | a | M (x) | SW | mm | Nm | Kpm | Nm | Kpm | kN | N/mm² |
| BO-QA09 | 10170 | 9,00 | 16,00 | 16,10 | 10,80 | 21,50 | 1:10 | 5,725 | M14 x 1,5 | 19 | 5,00 | 14,00 | 1,42 | 13,58 | 1,38 | 1,0995 | 25,28 |
| BO-QA09 | 10171 | 9,00 | 22,00 | 16,10 | 14,10 | 26,80 | 1:10 | 5,725 | M14 x 1,5 | 19 | 5,00 | 16,00 | 1,63 | 15,52 | 1,58 | 1,2566 | 19,57 |
| BO-QA09 | 10172-S | 9,00 | 26,00 | 16,10 | 16,20 | 31,00 | 1:10 | 5,725 | M14 x 1,5 | 19 | 5,00 | 18,00 | 1,83 | 17,46 | 1,78 | 1,4137 | 17,15 |
| BO-QA09 | 10172-L | 9,00 | 30,00 | 16,10 | 16,20 | 35,80 | 1:10 | 5,725 | M14 x 1,5 | 19 | 5,00 | 20,00 | 2,03 | 19,40 | 1,97 | 1,5708 | 17,15 |
| BO-QA09 | 10173 | 9,00 | 16,00 | 18,10 | 11,50 | 21,90 | 1:10 | 5,725 | M16 x 1,5 | 22 | 6,00 | 15,00 | 1,53 | 14,55 | 1,48 | 1,1781 | 21,09 |
| BO-QA09 | 10174 | 9,00 | 22,00 | 18,10 | 14,10 | 27,60 | 1:10 | 5,725 | M16 x 1,5 | 22 | 6,00 | 17,00 | 1,73 | 16,49 | 1,68 | 1,3352 | 17,33 |
| BO-QA09 | 10175 | 9,00 | 30,00 | 18,10 | 16,50 | 36,90 | 1:10 | 5,725 | M16 x 1,5 | 22 | 6,00 | 19,00 | 1,93 | 18,43 | 1,87 | 1,4923 | 14,91 |
| BO-QA09 | 10035-9 | 9,00 | 30,00 | 23,50 | 22,20 | 40,85 | 1:10 | 5,725 | M20 x 1,5 | 27 | 8,00 | 25,00 | 2,54 | 24,25 | 2,47 | 1,9635 | 8,55 |
| BO-QA10 | 10027 | 10,00 | 16,00 | 16,10 | 10,80 | 21,50 | 1:10 | 5,725 | M14 x 1,5 | 19 | 5,00 | 18,00 | 1,83 | 17,46 | 1,78 | 1,3137 | 25,28 |
| BO-QA10 | 10028 | 10,00 | 22,00 | 16,10 | 14,10 | 26,80 | 1:10 | 5,725 | M14 x 1,5 | 19 | 5,00 | 20,00 | 2,03 | 19,40 | 1,97 | 1,5708 | 19,57 |
| BO-QA10 | 10029-S | 10,00 | 26,00 | 16,10 | 16,20 | 31,00 | 1:10 | 5,725 | M14 x 1,5 | 19 | 5,00 | 22,00 | 2,24 | 21,34 | 2,17 | 1,7279 | 17,15 |
| BO-QA10 | 10029-L | 10,00 | 30,00 | 16,10 | 16,20 | 35,80 | 1:10 | 5,725 | M14 x 1,5 | 19 | 5,00 | 24,00 | 2,44 | 23,28 | 2,37 | 1,8849 | 17,15 |
| BO-QA10 | 10030 | 10,00 | 16,00 | 18,10 | 11,50 | 21,90 | 1:10 | 5,725 | M16 x 1,5 | 22 | 6,00 | 18,00 | 1,83 | 17,46 | 1,78 | 1,4137 | 21,09 |
| BO-QA10 | 10031 | 10,00 | 22,00 | 18,10 | 14,10 | 27,60 | 1:10 | 5,725 | M16 x 1,5 | 22 | 6,00 | 20,00 | 2,03 | 19,40 | 1,97 | 1,5708 | 17,33 |
| BO-QA10 | 10032 | 10,00 | 30,00 | 18,10 | 16,50 | 36,90 | 1:10 | 5,725 | M16 x 1,5 | 22 | 6,00 | 22,00 | 2,24 | 21,34 | 2,17 | 1,7279 | 14,91 |
| BO-QA10 | 10033 | 10,00 | 16,00 | 23,50 | 12,40 | 24,80 | 1:10 | 5,725 | M20 x 1,5 | 27 | 8,00 | 20,00 | 2,03 | 19,40 | 1,97 | 1,5708 | 14,98 |
| BO-QA10 | 10034 | 10,00 | 22,00 | 23,50 | 17,50 | 32,00 | 1:10 | 5,725 | M20 x 1,5 | 27 | 8,00 | 22,00 | 2,24 | 21,34 | 2,17 | 1,7279 | 10,73 |
| BO-QA10 | 10035-10 | 10,00 | 30,00 | 23,50 | 22,20 | 40,85 | 1:10 | 5,725 | M20 x 1,5 | 27 | 8,00 | 24,00 | 2,44 | 23,28 | 2,37 | 1,8850 | 8,55 |
| BO-QA11 | 10036 | 11,00 | 16,00 | 18,10 | 11,50 | 21,90 | 1:10 | 5,725 | M16 x 1,5 | 22 | 6,00 | 20,00 | 2,03 | 19,40 | 1,97 | 1,5708 | 21,09 |
| BO-QA11 | 10037 | 11,00 | 22,00 | 18,10 | 14,10 | 27,60 | 1:10 | 5,725 | M16 x 1,5 | 22 | 6,00 | 22,00 | 2,24 | 21,34 | 2,17 | 1,7279 | 17,33 |
| BO-QA11 | 10038 | 11,00 | 30,00 | 18,10 | 16,50 | 36,90 | 1:10 | 5,725 | M16 x 1,5 | 22 | 6,00 | 24,00 | 2,44 | 23,28 | 2,37 | 1,8850 | 14,91 |
| BO-QA11 | 10039 | 11,00 | 16,00 | 23,50 | 12,40 | 24,80 | 1:10 | 5,725 | M20 x 1,5 | 27 | 8,00 | 22,00 | 2,24 | 21,34 | 2,17 | 1,7279 | 14,98 |
| BO-QA11 | 10040 | 11,00 | 22,00 | 23,50 | 17,50 | 32,00 | 1:10 | 5,725 | M20 x 1,5 | 27 | 8,00 | 24,00 | 2,44 | 23,28 | 2,37 | 1,8850 | 10,73 |
| BO-QA11 | 10041 | 11,00 | 30,00 | 23,50 | 22,20 | 40,85 | 1:10 | 5,725 | M20 x 1,5 | 27 | 8,00 | 26,00 | 2,64 | 25,22 | 2,56 | 2,0420 | 8,55 |
| BO-QA12 | 10042 | 12,00 | 16,00 | 18,10 | 11,50 | 21,90 | 1:10 | 5,725 | M16 x 1,5 | 22 | 6,00 | 24,00 | 2,44 | 23,28 | 2,37 | 1,8850 | 21,09 |
| BO-QA12 | 10043 | 12,00 | 22,00 | 18,10 | 14,10 | 27,60 | 1:10 | 5,725 | M16 x 1,5 | 22 | 6,00 | 26,00 | 2,64 | 25,22 | 2,56 | 2,0420 | 17,33 |
| BO-QA12 | 10044 | 12,00 | 30,00 | 18,10 | 16,50 | 36,90 | 1:10 | 5,725 | M16 x 1,5 | 22 | 6,00 | 28,00 | 2,85 | 27,16 | 2,76 | 2,1991 | 14,91 |
| BO-QA12 | 10045 | 12,00 | 16,00 | 23,50 | 12,40 | 24,80 | 1:10 | 5,725 | M20 x 1,5 | 27 | 8,00 | 24,00 | 2,44 | 23,28 | 2,37 | 1,8850 | 14,98 |
| BO-QA12 | 10046 | 12,00 | 22,00 | 23,50 | 17,50 | 32,00 | 1:10 | 5,725 | M20 x 1,5 | 27 | 8,00 | 26,00 | 2,64 | 25,22 | 2,56 | 2,0420 | 10,73 |
| BO-QA12 | 10047 | 12,00 | 30,00 | 23,50 | 22,20 | 40,85 | 1:10 | 5,725 | M20 x 1,5 | 27 | 8,00 | 28,00 | 2,85 | 27,16 | 2,76 | 2,1991 | 8,55 |
| BO-QA12 | 10212 | 12,00 | 16,00 | 27,30 | 13,00 | 24,00 | 1:10 | 5,725 | M24 x 1,25 | 30 | 8,00 | 50,00 | 5,08 | 48,50 | 4,93 | 4,7124 | 12,27 |
| BO-QA12 | 10312 | 12,00 | 22,00 | 27,30 | 17,50 | 30,00 | 1:10 | 5,725 | M24 x 1,25 | 30 | 8,00 | 55,00 | 5,59 | 53,35 | 5,43 | 5,1836 | 9,19 |
| BO-QA12 | 10412 | 12,00 | 30,00 | 27,30 | 24,30 | 38,50 | 1:10 | 5,725 | M24 x 1,25 | 30 | 8,00 | 60,00 | 6,10 | 58,20 | 5,92 | 5,6549 | 6,70 |
| BO-QA13 | 10048 | 13,00 | 16,00 | 23,50 | 12,40 | 24,80 | 1:10 | 5,725 | M20 x 1,5 | 27 | 8,00 | 26,00 | 2,64 | 25,22 | 2,56 | 2,0420 | 14,98 |
| BO-QA13 | 10049 | 13,00 | 22,00 | 23,50 | 17,50 | 32,00 | 1:10 | 5,725 | M20 x 1,5 | 27 | 8,00 | 28,00 | 2,85 | 27,16 | 2,76 | 2,1991 | 10,73 |
| BO-QA13 | 10050 | 13,00 | 30,00 | 23,50 | 22,20 | 40,85 | 1:10 | 5,725 | M20 x 1,5 | 27 | 8,00 | 30,00 | 3,05 | 29,10 | 2,96 | 2,3562 | 8,55 |
| BO-QA13 | 10213 | 13,00 | 16,00 | 27,30 | 13,00 | 24,00 | 1:10 | 5,725 | M24 x 1,25 | 30 | 8,00 | 55,00 | 5,59 | 53,35 | 5,43 | 5,1836 | 12,27 |
| BO-QA13 | 10313 | 13,00 | 22,00 | 27,30 | 17,50 | 30,00 | 1:10 | 5,725 | M24 x 1,25 | 30 | 8,00 | 60,00 | 6,10 | 58,20 | 5,92 | 5,6549 | 9,19 |
| BO-QA13 | 10413 | 13,00 | 30,00 | 27,30 | 24,30 | 38,50 | 1:10 | 5,725 | M24 x 1,25 | 30 | 8,00 | 65,00 | 6,61 | 63,05 | 6,41 | 6,1261 | 6,70 |
| BO-QA14 | 10051 | 14,00 | 16,00 | 23,50 | 12,40 | 24,80 | 1:10 | 5,725 | M20 x 1,5 | 27 | 8,00 | 30,00 | 3,05 | 29,10 | 2,96 | 2,3562 | 14,98 |
| BO-QA14 | 10052 | 14,00 | 22,00 | 23,50 | 17,50 | 32,00 | 1:10 | 5,725 | M20 x 1,5 | 27 | 8,00 | 32,00 | 3,25 | 31,04 | 3,16 | 2,5133 | 10,73 |
| BO-QA14 | 10053 | 14,00 | 30,00 | 23,50 | 22,20 | 40,85 | 1:10 | 5,725 | M20 x 1,5 | 27 | 8,00 | 34,00 | 3,46 | 32,98 | 3,35 | 2,6703 | 8,55 |
| BO-QA14 | 10214 | 14,00 | 16,00 | 27,30 | 13,00 | 24,00 | 1:10 | 5,725 | M24 x 1,25 | 30 | 8,00 | 60,00 | 6,10 | 58,20 | 5,92 | 5,6550 | 12,27 |
| BO-QA14 | 10314 | 14,00 | 22,00 | 27,30 | 17,50 | 30,00 | 1:10 | 5,725 | M24 x 1,25 | 30 | 8,00 | 65,00 | 6,61 | 63,05 | 6,41 | 6,1261 | 9,19 |
| BO-QA14 | 10414 | 14,00 | 30,00 | 27,30 | 24,30 | 38,50 | 1:10 | 5,725 | M24 x 1,25 | 30 | 8,00 | 70,00 | 7,12 | 67,90 | 6,91 | 6,5973 | 6,70 |
| BO-QA15 | 10054 | 15,00 | 16,00 | 23,50 | 12,40 | 24,80 | 1:10 | 5,725 | M20 x 1,5 | 27 | 8,00 | 36,00 | 3,66 | 34,92 | 3,55 | 2,8274 | 14,98 |
| BO-QA15 | 10055 | 15,00 | 22,00 | 23,50 | 17,50 | 32,00 | 1:10 | 5,725 | M20 x 1,5 | 27 | 8,00 | 38,00 | 3,86 | 36,86 | 3,75 | 2,9845 | 10,73 |
| BO-QA15 | 10056 | 15,00 | 30,00 | 23,50 | 22,20 | 40,85 | 1:10 | 5,725 | M20 x 1,5 | 27 | 8,00 | 40,00 | 4,07 | 38,80 | 3,95 | 3,1416 | 8,55 |
| BO-QA15 | 10215 | 15,00 | 16,00 | 27,30 | 13,00 | 24,00 | 1:10 | 5,725 | M24 x 1,25 | 30 | 8,00 | 70,00 | 7,12 | 67,90 | 6,91 | 6,5973 | 12,27 |
| BO-QA15 | 10315 | 15,00 | 22,00 | 27,30 | 17,50 | 30,00 | 1:10 | 5,725 | M24 x 1,25 | 30 | 8,00 | 75,00 | 7,63 | 72,75 | 7,40 | 7,0686 | 9,19 |

| Bushing | Article | Shaft Ø | Hub width max. | Taper Ø d2 | Length taper | Length element | Taper ratio | Taper angle | Thread | Key width | Nut height | Tigh-tening torque | Transmission values | | | | |
|---|---|---|---|---|---|---|---|---|---|---|---|---|---|---|---|---|---|
| | | | | | | | | | | | | | Torque | | | Shearing force | Hub load |
| | | mm | mm | mm | Lk | Le | C = 1:x | a | M (x) | SW | mm | Nm | Kpm | Nm | Kpm | kN | N/mm² |
| BO-QA15 | 10415 | 15,00 | 30,00 | 27,30 | 24,30 | 38,50 | 1:10 | 5,725 | M24 x 1,25 | 30 | 8,00 | 80,00 | 8,14 | 77,60 | 7,89 | 7,5397 | 6,70 |
| BO-QA15 | 10057 | 15,00 | 22,00 | 34,00 | 14,50 | 33,30 | 1:10 | 5,725 | M30 x 1,5 | 36 | 10,00 | 130,00 | 13,22 | 126,10 | 12,82 | 10,2102 | 8,81 |
| BO-QA15 | 10058 | 15,00 | 28,00 | 34,00 | 18,10 | 38,40 | 1:10 | 5,725 | M30 x 1,5 | 36 | 10,00 | 140,00 | 14,24 | 135,80 | 13,81 | 10,9956 | 7,09 |
| BO-QA15 | 10059-S | 15,00 | 35,00 | 34,00 | 23,30 | 46,00 | 1:10 | 5,725 | M30 x 1,5 | 36 | 10,00 | 150,00 | 15,25 | 145,50 | 14,80 | 11,7810 | 5,55 |
| BO-QA15 | 10059-L | 15,00 | 40,00 | 34,00 | 29,50 | 51,50 | 1:10 | 5,725 | M30 x 1,5 | 36 | 10,00 | 160,00 | 16,27 | 155,20 | 15,78 | 12,5664 | 4,43 |
| BO-QA16 | 10060 | 16,00 | 16,00 | 23,50 | 12,40 | 24,80 | 1:10 | 5,725 | M20 x 1,5 | 27 | 8,00 | 42,00 | 4,27 | 40,74 | 4,14 | 3,2987 | 14,98 |
| BO-QA16 | 10061 | 16,00 | 22,00 | 23,50 | 17,50 | 32,00 | 1:10 | 5,725 | M20 x 1,5 | 27 | 8,00 | 46,00 | 4,68 | 44,62 | 4,54 | 3,6128 | 10,73 |
| BO-QA16 | 10062 | 16,00 | 30,00 | 23,50 | 22,20 | 40,85 | 1:10 | 5,725 | M20 x 1,5 | 27 | 8,00 | 50,00 | 5,08 | 48,50 | 4,93 | 3,9270 | 8,55 |
| BO-QA16 | 10216 | 16,00 | 16,00 | 27,30 | 13,00 | 24,00 | 1:10 | 5,725 | M24 x 1,25 | 30 | 8,00 | 70,00 | 7,12 | 67,90 | 6,91 | 6,5973 | 12,27 |
| BO-QA16 | 10316 | 16,00 | 22,00 | 27,30 | 17,50 | 30,00 | 1:10 | 5,725 | M24 x 1,25 | 30 | 8,00 | 75,00 | 7,63 | 72,75 | 7,40 | 7,0686 | 9,19 |
| BO-QA16 | 10416 | 16,00 | 30,00 | 27,30 | 24,30 | 38,50 | 1:10 | 5,725 | M24 x 1,25 | 30 | 8,00 | 80,00 | 8,14 | 77,60 | 7,89 | 7,5398 | 6,70 |
| BO-QA16 | 10063 | 16,00 | 22,00 | 34,00 | 14,50 | 33,30 | 1:10 | 5,725 | M30 x 1,5 | 36 | 10,00 | 140,00 | 14,24 | 135,80 | 13,81 | 10,9956 | 8,81 |
| BO-QA16 | 10064 | 16,00 | 28,00 | 34,00 | 18,10 | 38,40 | 1:10 | 5,725 | M30 x 1,5 | 36 | 10,00 | 150,00 | 15,25 | 145,50 | 14,80 | 11,7810 | 7,09 |
| BO-QA16 | 10065-S | 16,00 | 35,00 | 34,00 | 23,30 | 46,00 | 1:10 | 5,725 | M30 x 1,5 | 36 | 10,00 | 160,00 | 16,27 | 155,20 | 15,78 | 12,5664 | 5,55 |
| BO-QA16 | 10065-L | 16,00 | 40,00 | 34,00 | 29,50 | 51,50 | 1:10 | 5,725 | M30 x 1,5 | 36 | 10,00 | 170,00 | 17,29 | 164,90 | 16,77 | 13,3518 | 4,43 |
| BO-QA17 | 10217 | 17,00 | 16,00 | 27,30 | 13,00 | 24,00 | 1:10 | 5,725 | M24 x 1,25 | 30 | 8,00 | 75,00 | 7,63 | 72,75 | 7,40 | 7,0686 | 12,27 |
| BO-QA17 | 10317 | 17,00 | 22,00 | 27,30 | 17,50 | 30,00 | 1:10 | 5,725 | M24 x 1,25 | 30 | 8,00 | 80,00 | 8,14 | 77,60 | 7,89 | 7,5398 | 9,19 |
| BO-QA17 | 10417 | 17,00 | 30,00 | 27,30 | 24,30 | 38,50 | 1:10 | 5,725 | M24 x 1,25 | 30 | 8,00 | 85,00 | 8,64 | 82,45 | 8,38 | 8,0111 | 6,70 |
| BO-QA17 | 10066 | 17,00 | 22,00 | 34,00 | 14,50 | 33,30 | 1:10 | 5,725 | M30 x 1,5 | 36 | 10,00 | 150,00 | 15,25 | 145,50 | 14,80 | 11,7810 | 8,81 |
| BO-QA17 | 10067 | 17,00 | 28,00 | 34,00 | 18,10 | 38,40 | 1:10 | 5,725 | M30 x 1,5 | 36 | 10,00 | 160,00 | 16,27 | 155,20 | 15,78 | 12,5664 | 7,09 |
| BO-QA17 | 10068-S | 17,00 | 35,00 | 34,00 | 23,30 | 46,00 | 1:10 | 5,725 | M30 x 1,5 | 36 | 10,00 | 170,00 | 17,29 | 164,90 | 16,77 | 13,3518 | 5,55 |
| BO-QA17 | 10068-L | 17,00 | 40,00 | 34,00 | 29,50 | 51,50 | 1:10 | 5,725 | M30 x 1,5 | 36 | 10,00 | 180,00 | 18,31 | 174,60 | 17,76 | 14,1372 | 4,43 |
| BO-QA18 | 10218 | 18,00 | 16,00 | 27,30 | 13,00 | 24,00 | 1:10 | 5,725 | M24 x 1,25 | 30 | 8,00 | 80,00 | 8,14 | 77,60 | 7,89 | 7,5398 | 12,27 |
| BO-QA18 | 10318 | 18,00 | 22,00 | 27,30 | 17,50 | 30,00 | 1:10 | 5,725 | M24 x 1,25 | 30 | 8,00 | 85,00 | 8,64 | 82,45 | 8,38 | 8,0111 | 9,19 |
| BO-QA18 | 10418 | 18,00 | 30,00 | 27,30 | 24,30 | 38,50 | 1:10 | 5,725 | M24 x 1,25 | 30 | 8,00 | 90,00 | 9,15 | 87,30 | 8,88 | 8,4823 | 6,70 |
| BO-QA18 | 10069 | 18,00 | 22,00 | 34,00 | 14,50 | 33,30 | 1:10 | 5,725 | M30 x 1,5 | 36 | 10,00 | 160,00 | 16,27 | 155,20 | 15,78 | 12,5664 | 8,81 |
| BO-QA18 | 10070 | 18,00 | 28,00 | 34,00 | 18,10 | 38,40 | 1:10 | 5,725 | M30 x 1,5 | 36 | 10,00 | 170,00 | 17,29 | 164,90 | 16,77 | 13,3518 | 7,09 |
| BO-QA18 | 10071-S | 18,00 | 35,00 | 34,00 | 23,30 | 46,00 | 1:10 | 5,725 | M30 x 1,5 | 36 | 10,00 | 180,00 | 18,31 | 174,60 | 17,76 | 14,1372 | 5,55 |
| BO-QA18 | 10071-L | 18,00 | 40,00 | 34,00 | 29,50 | 51,50 | 1:10 | 5,725 | M30 x 1,5 | 36 | 10,00 | 190,00 | 19,32 | 184,30 | 18,74 | 14,9226 | 4,43 |
| BO-QA19 | 10219 | 19,00 | 16,00 | 27,30 | 13,00 | 24,00 | 1:10 | 5,725 | M24 x 1,25 | 30 | 8,00 | 85,00 | 8,64 | 82,45 | 8,38 | 8,0111 | 12,27 |
| BO-QA19 | 10319 | 19,00 | 22,00 | 27,30 | 17,50 | 30,00 | 1:10 | 5,725 | M24 x 1,25 | 30 | 8,00 | 90,00 | 9,15 | 87,30 | 8,88 | 8,4823 | 9,19 |
| BO-QA19 | 10419 | 19,00 | 30,00 | 27,30 | 24,30 | 38,50 | 1:10 | 5,725 | M24 x 1,25 | 30 | 8,00 | 95,00 | 9,66 | 92,15 | 9,37 | 8,9535 | 6,70 |
| BO-QA19 | 10072 | 19,00 | 22,00 | 34,00 | 14,50 | 33,30 | 1:10 | 5,725 | M30 x 1,5 | 36 | 10,00 | 170,00 | 17,29 | 164,90 | 16,77 | 13,3518 | 8,81 |
| BO-QA19 | 10073 | 19,00 | 28,00 | 34,00 | 18,10 | 38,40 | 1:10 | 5,725 | M30 x 1,5 | 36 | 10,00 | 180,00 | 18,31 | 174,60 | 17,76 | 14,1372 | 7,09 |
| BO-QA19 | 10074-S | 19,00 | 35,00 | 34,00 | 23,30 | 46,00 | 1:10 | 5,725 | M30 x 1,5 | 36 | 10,00 | 190,00 | 19,32 | 184,30 | 18,74 | 14,9226 | 5,55 |
| BO-QA19 | 10074-L | 19,00 | 40,00 | 34,00 | 29,50 | 51,50 | 1:10 | 5,725 | M30 x 1,5 | 36 | 10,00 | 200,00 | 20,34 | 194,00 | 19,73 | 15,7080 | 4,43 |
| BO-QA20 | 10220 | 20,00 | 16,00 | 27,30 | 13,00 | 24,00 | 1:10 | 5,725 | M24 x 1,25 | 30 | 8,00 | 90,00 | 9,15 | 87,30 | 8,88 | 8,4823 | 12,27 |
| BO-QA20 | 10320 | 20,00 | 22,00 | 27,30 | 17,50 | 30,00 | 1:10 | 5,725 | M24 x 1,25 | 30 | 8,00 | 95,00 | 9,66 | 92,15 | 9,37 | 8,9535 | 9,19 |
| BO-QA20 | 10420 | 20,00 | 30,00 | 27,30 | 24,30 | 38,50 | 1:10 | 5,725 | M24 x 1,25 | 30 | 8,00 | 100,00 | 10,17 | 97,00 | 9,86 | 9,4248 | 6,70 |
| BO-QA20 | 10089 | 20,00 | 22,00 | 34,00 | 14,50 | 33,30 | 1:10 | 5,725 | M30 x 1,5 | 36 | 10,00 | 180,00 | 18,31 | 174,60 | 17,76 | 14,1372 | 8,81 |
| BO-QA20 | 10090 | 20,00 | 28,00 | 34,00 | 18,10 | 38,40 | 1:10 | 5,725 | M30 x 1,5 | 36 | 10,00 | 190,00 | 19,32 | 184,30 | 18,74 | 14,9226 | 7,09 |
| BO-QA20 | 10091-S | 20,00 | 35,00 | 34,00 | 23,30 | 46,00 | 1:10 | 5,725 | M30 x 1,5 | 36 | 10,00 | 200,00 | 20,34 | 194,00 | 19,73 | 15,7080 | 5,55 |
| BO-QA20 | 10091-L | 20,00 | 40,00 | 34,00 | 29,50 | 51,50 | 1:10 | 5,725 | M30 x 1,5 | 36 | 10,00 | 210,00 | 21,36 | 203,70 | 20,72 | 16,4934 | 4,43 |
| BO-QA20 | 10093 | 20,00 | 22,00 | 39,80 | 18,50 | 40,00 | 1:10 | 5,725 | M36 x 1,5 | 55 | 14,00 | 110,00 | 11,19 | 106,70 | 10,85 | 8,6394 | 5,91 |
| BO-QA20 | 10094 | 20,00 | 30,00 | 39,80 | 26,50 | 48,50 | 1:10 | 5,725 | M36 x 1,5 | 55 | 14,00 | 120,00 | 12,20 | 116,40 | 11,84 | 9,4248 | 4,17 |
| BO-QA20 | 11095 | 20,00 | 45,00 | 39,80 | 35,00 | 64,50 | 1:10 | 5,725 | M36 x 1,5 | 55 | 14,00 | 130,00 | 13,22 | 126,10 | 12,82 | 10,2102 | 3,19 |
| BO-QA21 | 10095 | 21,00 | 22,00 | 34,00 | 14,50 | 33,30 | 1:10 | 5,725 | M30 x 1,5 | 36 | 10,00 | 190,00 | 19,32 | 184,30 | 18,74 | 14,9226 | 8,81 |
| BO-QA21 | 10096 | 21,00 | 28,00 | 34,00 | 18,10 | 38,40 | 1:10 | 5,725 | M30 x 1,5 | 36 | 10,00 | 200,00 | 20,34 | 194,00 | 19,73 | 15,7080 | 7,09 |
| BO-QA21 | 10097-S | 21,00 | 35,00 | 34,00 | 23,30 | 46,00 | 1:10 | 5,725 | M30 x 1,5 | 36 | 10,00 | 210,00 | 21,36 | 203,70 | 20,72 | 16,4934 | 3,66 |
| BO-QA21 | 10097-L | 21,00 | 40,00 | 34,00 | 29,50 | 51,50 | 1:10 | 5,725 | M30 x 1,5 | 36 | 10,00 | 220,00 | 22,37 | 213,40 | 21,70 | 17,2788 | 4,43 |

| Bushing | Article | Shaft Ø | Hub width max. | Taper Ø d2 | Length taper | Length element | Taper ratio | Taper angle | Thread | Key width | Nut height | Tigh-tening torque | Transmission values | | | | |
|---|---|---|---|---|---|---|---|---|---|---|---|---|---|---|---|---|---|
| | | | | | | | | | | | | | Torque | | | Shearing force | Hub load |
| | | mm | mm | mm | Lk | Le | C = 1:x | a | M (x) | SW | mm | Nm | Kpm | Nm | Kpm | kN | N/mm² |
| BO-QA21 | 10099 | 21,00 | 22,00 | 39,80 | 18,50 | 40,00 | 1:10 | 5,725 | M36 x 1,5 | 55 | 14,00 | 130,00 | 13,22 | 126,10 | 12,82 | 10,2102 | 5,91 |
| BO-QA21 | 10100 | 21,00 | 30,00 | 39,80 | 26,50 | 48,50 | 1:10 | 5,725 | M36 x 1,5 | 55 | 14,00 | 140,00 | 14,24 | 135,80 | 13,81 | 10,9956 | 4,17 |
| BO-QA21 | 11101 | 21,00 | 45,00 | 39,80 | 35,00 | 64,50 | 1:10 | 5,725 | M36 x 1,5 | 55 | 14,00 | 150,00 | 15,25 | 145,50 | 14,80 | 11,7810 | 3,19 |
| BO-QA22 | 10101 | 22,00 | 22,00 | 34,00 | 14,50 | 33,30 | 1:10 | 5,725 | M30 x 1,5 | 36 | 10,00 | 200,00 | 20,34 | 194,00 | 19,73 | 15,7080 | 8,81 |
| BO-QA22 | 10102 | 22,00 | 28,00 | 34,00 | 18,10 | 38,40 | 1:10 | 5,725 | M30 x 1,5 | 36 | 10,00 | 210,00 | 21,36 | 203,70 | 20,72 | 16,4934 | 7,09 |
| BO-QA22 | 10103-S | 22,00 | 35,00 | 34,00 | 23,30 | 46,00 | 1:10 | 5,725 | M30 x 1,5 | 36 | 10,00 | 220,00 | 22,37 | 213,40 | 21,70 | 17,2788 | 5,55 |
| BO-QA22 | 10103-L | 22,00 | 40,00 | 34,00 | 29,50 | 51,50 | 1:10 | 5,725 | M30 x 1,5 | 36 | 10,00 | 230,00 | 23,39 | 223,10 | 22,69 | 18,0642 | 4,43 |
| BO-QA22 | 10105 | 22,00 | 22,00 | 39,80 | 18,50 | 40,00 | 1:10 | 5,725 | M36 x 1,5 | 55 | 14,00 | 150,00 | 15,25 | 145,50 | 14,80 | 11,7810 | 5,91 |
| BO-QA22 | 10106 | 22,00 | 30,00 | 39,80 | 26,50 | 48,50 | 1:10 | 5,725 | M36 x 1,5 | 55 | 14,00 | 160,00 | 16,27 | 155,20 | 15,78 | 12,5664 | 4,17 |
| BO-QA22 | 11107 | 22,00 | 45,00 | 39,80 | 35,00 | 64,50 | 1:10 | 5,725 | M36 x 1,5 | 55 | 14,00 | 170,00 | 17,29 | 164,90 | 16,77 | 13,3518 | 3,19 |
| BO-QA24 | 10107 | 24,00 | 22,00 | 34,00 | 14,50 | 33,30 | 1:10 | 5,725 | M30 x 1,5 | 36 | 10,00 | 210,00 | 21,36 | 203,70 | 20,72 | 16,4934 | 8,81 |
| BO-QA24 | 10108 | 24,00 | 28,00 | 34,00 | 18,10 | 38,40 | 1:10 | 5,725 | M30 x 1,5 | 36 | 10,00 | 220,00 | 22,37 | 213,40 | 21,70 | 17,2788 | 7,09 |
| BO-QA24 | 10109-S | 24,00 | 35,00 | 34,00 | 23,30 | 46,00 | 1:10 | 5,725 | M30 x 1,5 | 36 | 10,00 | 230,00 | 23,39 | 223,10 | 22,69 | 18,0642 | 5,55 |
| BO-QA24 | 10109-L | 24,00 | 40,00 | 34,00 | 29,50 | 51,50 | 1:10 | 5,725 | M30 x 1,5 | 36 | 10,00 | 240,00 | 24,41 | 232,80 | 23,67 | 18,8496 | 4,43 |
| BO-QA24 | 10111 | 24,00 | 22,00 | 39,80 | 18,50 | 40,00 | 1:10 | 5,725 | M36 x 1,5 | 55 | 14,00 | 180,00 | 18,31 | 174,60 | 17,76 | 14,1372 | 5,91 |
| BO-QA24 | 10112 | 24,00 | 30,00 | 39,80 | 26,50 | 48,50 | 1:10 | 5,725 | M36 x 1,5 | 55 | 14,00 | 190,00 | 19,32 | 184,30 | 18,74 | 14,9226 | 4,17 |
| BO-QA24 | 11113 | 24,00 | 45,00 | 39,80 | 35,00 | 64,50 | 1:10 | 5,725 | M36 x 1,5 | 55 | 14,00 | 200,00 | 20,34 | 194,00 | 19,73 | 15,7080 | 3,19 |
| BO-QA25 | 10107-25 | 25,00 | 22,00 | 34,00 | 14,50 | 33,30 | 1:10 | 5,725 | M30 x 1,5 | 36 | 10,00 | 220,00 | 22,37 | 213,40 | 21,70 | 17,2788 | 8,81 |
| BO-QA25 | 10108-25 | 25,00 | 28,00 | 34,00 | 18,10 | 38,40 | 1:10 | 5,725 | M30 x 1,5 | 36 | 10,00 | 230,00 | 23,39 | 223,10 | 22,69 | 18,0642 | 7,09 |
| BO-QA25 | 10109-25S | 25,00 | 35,00 | 34,00 | 23,30 | 46,00 | 1:10 | 5,725 | M30 x 1,5 | 36 | 10,00 | 240,00 | 24,41 | 232,80 | 23,67 | 18,8496 | 5,55 |
| BO-QA25 | 10109-25L | 25,00 | 40,00 | 34,00 | 29,50 | 51,50 | 1:10 | 5,725 | M30 x 1,5 | 36 | 10,00 | 250,00 | 25,42 | 242,50 | 24,66 | 19,6350 | 4,43 |
| BO-QA25 | 10114 | 25,00 | 22,00 | 39,80 | 18,50 | 40,00 | 1:10 | 5,725 | M36 x 1,5 | 55 | 14,00 | 200,00 | 20,34 | 194,00 | 19,73 | 15,7080 | 5,91 |
| BO-QA25 | 10115 | 25,00 | 30,00 | 39,80 | 26,50 | 48,50 | 1:10 | 5,725 | M36 x 1,5 | 55 | 14,00 | 210,00 | 21,36 | 203,70 | 20,72 | 16,4934 | 4,17 |
| BO-QA25 | 11115 | 25,00 | 45,00 | 39,80 | 35,00 | 64,50 | 1:10 | 5,725 | M36 x 1,5 | 55 | 14,00 | 220,00 | 22,37 | 213,40 | 21,70 | 17,2788 | 3,19 |
| BO-QA28 | 10117 | 28,00 | 22,00 | 39,80 | 18,50 | 40,00 | 1:10 | 5,725 | M36 x 1,5 | 55 | 14,00 | 220,00 | 22,37 | 213,40 | 21,70 | 17,2788 | 5,91 |
| BO-QA28 | 10118 | 28,00 | 30,00 | 39,80 | 26,50 | 48,50 | 1:10 | 5,725 | M36 x 1,5 | 55 | 14,00 | 230,00 | 23,39 | 223,10 | 22,69 | 18,0642 | 4,17 |
| BO-QA28 | 11118 | 28,00 | 45,00 | 39,80 | 35,00 | 64,50 | 1:10 | 5,725 | M36 x 1,5 | 55 | 14,00 | 240,00 | 24,41 | 232,80 | 23,67 | 19,2423 | 3,19 |
| BO-QA30 | 10119 | 30,00 | 22,00 | 39,80 | 18,50 | 40,00 | 1:10 | 5,725 | M36 x 1,5 | 55 | 14,00 | 255,00 | 25,93 | 247,35 | 25,15 | 20,0277 | 5,91 |
| BO-QA30 | 10120 | 30,00 | 30,00 | 39,80 | 26,50 | 48,50 | 1:10 | 5,725 | M36 x 1,5 | 55 | 14,00 | 265,00 | 26,95 | 257,05 | 26,14 | 20,8131 | 4,16 |
| BO-QA30 | 10121 | 30,00 | 45,00 | 39,80 | 35,00 | 64,50 | 1:10 | 5,725 | M36 x 1,5 | 55 | 14,00 | 275,00 | 27,97 | 266,75 | 27,13 | 21,5984 | 3,19 |
| BO-QA 1/4" | 11134 | 6,35 | 9,00 | 11,30 | 6,50 | 14,00 | 1:10 | 5,725 | M10 x 1 | 13 | 3,50 | 9,00 | 0,92 | 8,73 | 0,89 | 1,0603 | 59,57 |
| BO-QA 1/4" | 10075 | 6,35 | 12,00 | 11,30 | 7,70 | 16,60 | 1:10 | 5,725 | M10 x 1 | 13 | 3,50 | 9,20 | 0,94 | 8,92 | 0,91 | 1,0838 | 50,56 |
| BO-QA 1/4" | 10076 | 6,35 | 16,00 | 11,30 | 11,50 | 22,00 | 1:10 | 5,725 | M10 x 1 | 13 | 3,50 | 9,40 | 0,96 | 9,12 | 0,93 | 1,1074 | 34,45 |
| BO-QA 1/4" | 10077 | 6,35 | 22,00 | 11,30 | 11,50 | 26,00 | 1:10 | 5,725 | M10 x 1 | 13 | 3,50 | 9,60 | 0,98 | 9,31 | 0,95 | 1,1310 | 34,45 |
| BO-QA 1/4" | 10079 | 6,35 | 12,00 | 13,60 | 8,60 | 16,00 | 1:10 | 5,725 | M12 x 1,25 | 19 | 5,90 | 9,00 | 0,92 | 8,73 | 0,89 | 0,8482 | 37,52 |
| BO-QA 1/4" | 10079-II | 6,35 | 12,00 | 13,60 | 8,60 | 16,00 | 1:10 | 5,725 | M12 x 1 | 15 | 4,00 | 9,00 | 0,92 | 8,73 | 0,89 | 0,8482 | 37,52 |
| BO-QA 1/4" | 10080 | 6,35 | 16,00 | 13,60 | 12,00 | 22,00 | 1:10 | 5,725 | M12 x 1,25 | 19 | 5,90 | 9,20 | 0,94 | 8,92 | 0,91 | 0,8771 | 27,24 |
| BO-QA 1/4" | 10081 | 6,35 | 22,00 | 13,60 | 14,00 | 26,00 | 1:10 | 5,725 | M12 x 1,25 | 19 | 5,90 | 9,40 | 0,96 | 9,12 | 0,93 | 0,8859 | 23,53 |
| BO-QA 1/4" | 10083 | 6,35 | 16,00 | 16,10 | 10,80 | 21,50 | 1:10 | 5,725 | M14 x 1,5 | 19 | 5,00 | 11,00 | 1,12 | 10,67 | 1,09 | 0,8639 | 25,28 |
| BO-QA 1/4" | 10084 | 6,35 | 22,00 | 16,10 | 14,10 | 26,80 | 1:10 | 5,725 | M14 x 1,5 | 19 | 5,00 | 13,00 | 1,32 | 12,61 | 1,28 | 1,0210 | 19,57 |
| BO-QA 1/4" | 10085 | 6,35 | 26,00 | 16,10 | 16,20 | 31,00 | 1:10 | 5,725 | M14 x 1,5 | 19 | 5,00 | 15,00 | 1,53 | 14,55 | 1,48 | 1,1781 | 17,15 |
| BO-QA 1/4" | 10086 | 6,35 | 16,00 | 18,10 | 11,50 | 21,90 | 1:10 | 5,725 | M16 x 1,5 | 22 | 6,00 | 11,00 | 1,12 | 10,67 | 1,09 | 0,8640 | 21,09 |
| BO-QA 1/4" | 10087 | 6,35 | 22,00 | 18,10 | 14,10 | 27,60 | 1:10 | 5,725 | M16 x 1,5 | 22 | 6,00 | 13,00 | 1,32 | 12,61 | 1,28 | 1,0210 | 17,33 |
| BO-QA 3/8" | 10122 | 9,52 | 16,00 | 16,10 | 10,80 | 21,50 | 1:10 | 5,725 | M14 x 1,5 | 19 | 5,00 | 16,00 | 1,63 | 15,52 | 1,58 | 1,2566 | 25,28 |
| BO-QA 3/8" | 10123 | 9,52 | 22,00 | 16,10 | 14,10 | 26,80 | 1:10 | 5,725 | M14 x 1,5 | 19 | 5,00 | 18,00 | 1,83 | 17,46 | 1,78 | 1,4137 | 19,57 |
| BO-QA 3/8" | 10124-S | 9,52 | 26,00 | 16,10 | 16,20 | 31,00 | 1:10 | 5,725 | M14 x 1,5 | 19 | 5,00 | 20,00 | 2,03 | 19,40 | 1,97 | 1,5708 | 17,15 |
| BO-QA 3/8" | 10124-L | 9,52 | 30,00 | 16,10 | 16,20 | 35,80 | 1:10 | 5,725 | M14 x 1,5 | 19 | 5,00 | 22,00 | 2,24 | 21,34 | 2,17 | 1,7279 | 17,15 |
| BO-QA 3/8" | 10125 | 9,52 | 16,00 | 18,10 | 11,50 | 21,90 | 1:10 | 5,725 | M16 x 1,5 | 22 | 6,00 | 16,00 | 1,63 | 15,52 | 1,58 | 1,2566 | 21,09 |
| BO-QA 3/8" | 10126 | 9,52 | 22,00 | 18,10 | 14,10 | 27,60 | 1:10 | 5,725 | M16 x 1,5 | 22 | 6,00 | 18,00 | 1,83 | 17,46 | 1,78 | 1,4137 | 17,33 |
| BO-QA 3/8" | 10127 | 9,52 | 30,00 | 18,10 | 16,50 | 36,90 | 1:10 | 5,725 | M16 x 1,5 | 22 | 6,00 | 20,00 | 2,03 | 19,40 | 1,97 | 1,5708 | 14,99 |

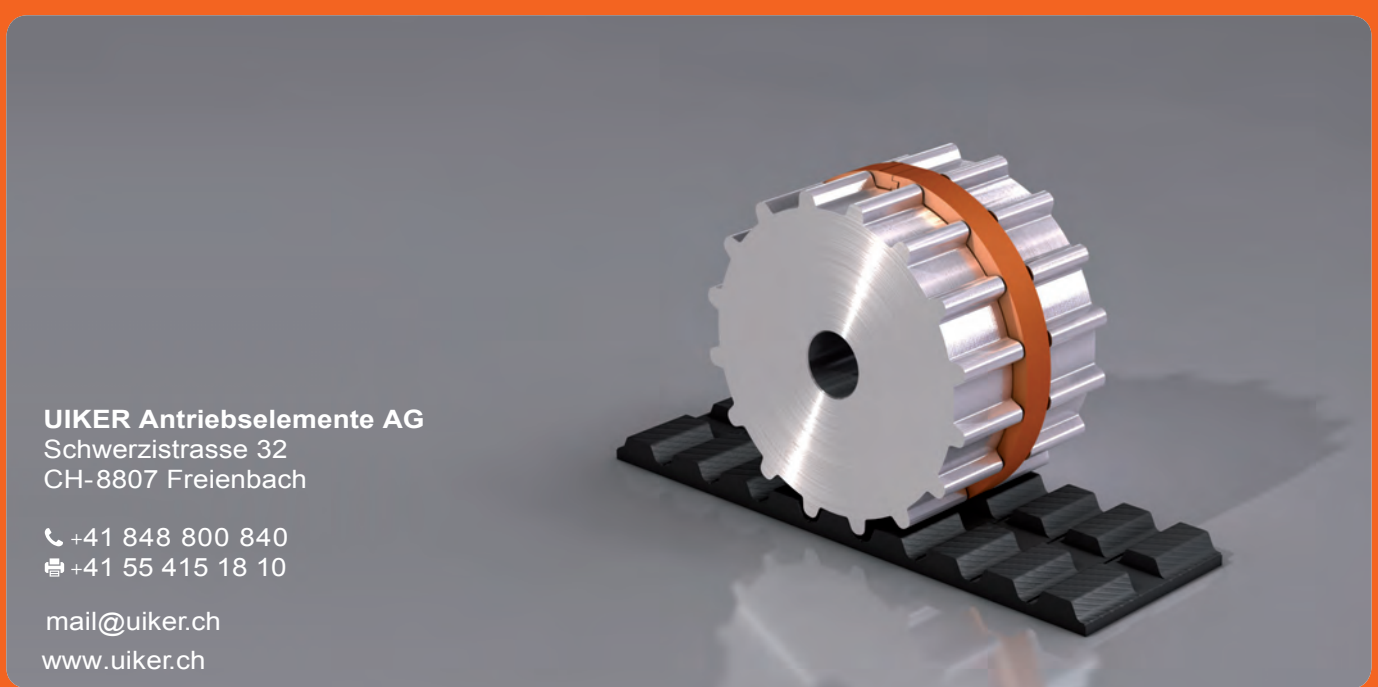

**UIKER Antriebselemente AG**
Schwerzistrasse 32
CH-8807 Freienbach

+41 848 800 840
+41 55 415 18 10

mail@uiker.ch
www.uiker.ch